I. A. F. W. A.

BEST MANAGEMENT PRACTICES

For Trapping Coyotes

In the Eastern United States

Acknowledgments

The International Association of Fish and Wildlife Agencies was founded in 1902. It is an organization of public agencies charged with the protection and management of North America's fish and wildlife resources. The 50 state fish and wildlife agencies, as well as provincial and territorial governments in Canada are members. Federal agencies in Canada and the United States are also members. The Association has been a key organization in promoting sound resource management and strengthening state, provincial, federal, and private cooperation in protecting and managing fish and wildlife and their habitats in the public interest.

Best Management Practices for Trapping Coyotes in the Eastern United States was written by the Furbearer Resources Technical Work Group of the International Association of Fish and Wildlife Agencies. Development of this document would not have been possible without the cooperation and participation of many state wildlife agencies. State agency personnel provided on-the-ground coordination and supervision in those states where Best Management Practice (BMP) trap research occurred, and many state agency staff people also provided constructive comments on earlier drafts of this document. We thank the wildlife veterinarians at the University of Georgia and the University of Wyoming who did evaluations of the captured animals.

We thank the members of trapper associations, technicians, and individual trappers who took part in the field research which supported the development of these BMPs. Their hard work and commitment to improving trapping in the United States was an essential contribution to the success of this project.

We also extend our appreciation to the many cooperating landowners who permitted BMP trap research to be conducted on their property. They have made a significant contribution to the future of furbearer management in the United States.

Funding for trapping BMP research and development was provided by the U.S. Department of Agriculture. We thank the USDA personnel who provided oversight and management of this effort. Additional funding was provided by the International Fur Trade Federation, and the many state agencies that made substantial in-kind contributions.

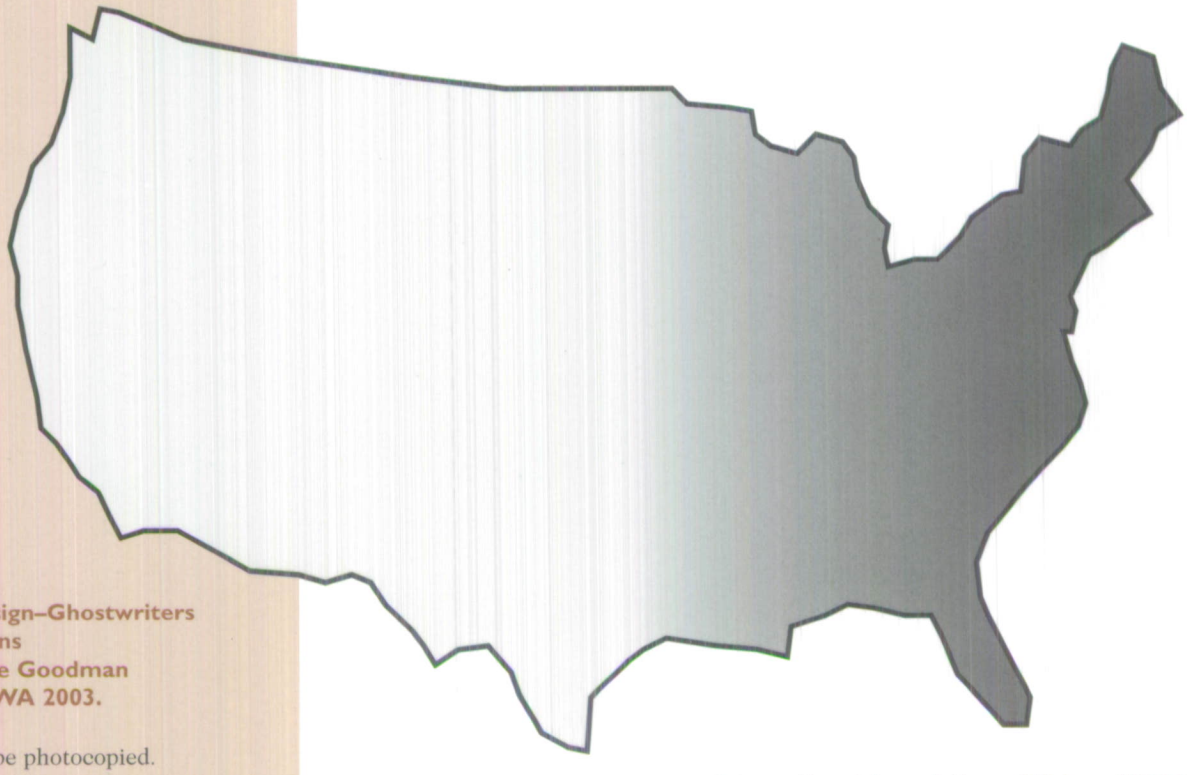

Credits:
Editing and design–Ghostwriters Communications
Illustrations–Joe Goodman
Copyright IAFWA 2003.

Document may be photocopied.

Introduction

Benefits of Trapping

Trapping is a highly regulated activity. Anyone who traps must follow strict rules established and enforced by the state fish and wildlife agencies. Restrictions on species that may be harvested, harvest seasons, trap types, and areas open to trapping are some examples of the guidelines and regulations that state agencies regularly review, implement, and enforce.

Trapping is an element of many wildlife management programs. In some cases, local populations of furbearers are controlled, thereby helping to minimize human-wildlife conflicts and mitigate habitat changes brought about by certain furbearer species. Similarly, trapping contributes to the protection of endangered species by controlling their predators. Trapping is also used to relocate animals to, and restore populations in, areas where conditions are suitable for the species to thrive.

Scientists collect important ecological information about wildlife through the use of trapping. Preferred habitats, migration patterns, and population indices for some species of wildlife are determined through capture and release programs and by monitoring regulated harvest levels. In addition, trapping can help reduce the exposure of rabies and other diseases to humans and pets. Trapping is widely recognized by the wildlife conservation community as a legitimate and beneficial outdoor activity, providing food, fur for garments, oils for soaps and lubricants, cosmetic items, artists' supplies, and other products.

The mission of the Furbearer Resources Technical Work Group of the International Association of Fish and Wildlife Agencies is to maintain the regulated use of trapping as a safe, efficient, and acceptable means of managing and harvesting wildlife for the benefits it provides to the public, while improving the welfare of trapped animals.

- **BMPs are intended to inform people about traps and trapping systems considered to be state-of-the-art in animal welfare and efficiency.**
- **The BMPs explain how some existing traps can be modified (where necessary) to enhance animal welfare.**
- **The use of BMPs by trappers is important for furbearer management programs across the United States.**

Table of Contents

Introduction 1

How Best Management Practices Were Developed 2

Additional Information for Trapping 5

The Eastern Coyote at a Glance 9

Specifications of Traps Meeting BMP Criteria for Coyotes in the Eastern United States 10

How Best Management Practices Were Developed

Best Management Practices (BMPs) are based on the most extensive research effort of animal traps ever conducted in the United States. Test traps were selected based on knowledge of the commonly used traps, previous research findings, and input from expert trappers. Rigorous experimental designs were developed by professional statisticians from universities and federal and state agencies. Experienced wildlife biologists and trappers developed study procedures, supervised or participated in field research and provided insight and expert technical advice on trapping methods to ensure the completion of each project. Data collection, including safety evaluations, was undertaken following widely accepted international standards for testing traps, per ISO Document 10990-5. Wildlife biologists and professional statisticians assisted in data analysis and interpretation during the development of this document.

Although many of the details of trap testing procedures and results are available in other documents, some understanding of the procedures is important.

Best Management Practices

Trapping Best Management Practices are documents that identify techniques and traps that address the welfare of trapped animals and allow for the efficient, selective, safe, and practical capture of furbearers. Trapping BMPs include both technical recommendations from expert trappers and biologists and a list of specifications of traps that meet or exceed BMP criteria.

BMPs for trapping furbearers in the United States are needed to address animal welfare, efficiency, and safety in furbearer management programs. Trapping BMPs are based on scientific information and professional experience regarding currently available traps and trapping technology. Wildlife management agencies are taking appropriate steps to assure that the traps and trapping systems being used are the best available to maintain trapping as an important wildlife management practice.

The trapping BMP project is intended to provide wildlife management professionals in the United States with the data necessary to assist in improvements to animal welfare in trapping programs. State fish and wildlife agencies must continue to take a lead role in establishing a practical and effective plan for the improvement of trapping systems in this country.

Wildlife agencies, trappers, trapper associations, and others have historically strived to improve trapping. Most of the advancements used today come from the work of trappers. Now, through BMP evaluations, a structure is in place to identify and document these trapping methods and equipment.

The suggestions contained in this BMP include practices, equipment, and techniques that trappers can voluntarily incorporate into their trapline. These practices will improve the welfare of trapped animals, avoid unintended captures of other animals, improve public confidence in trappers and wildlife managers, and maintain public support for trapping and wildlife management.

Trapping BMPs are intended to be a practical tool for trappers, wildlife biologists, trapper organizations, wildlife agencies, tribal agencies, and others interested in improving traps and trapping systems. They present suggestions, guidelines, and a list of traps to consider when trapping specific species in certain regions of the United States. These traps meet technical performance criteria.

This guide is meant to be used as a menu of options, allowing for discretion and decision-making in the field. It does not present a single choice that can or must be applied in all cases. For many trap users, the ultimate objective is to have economical trapping systems that are safe, practical,

selective, efficient, and address the welfare of trapped animals. BMPs will help achieve these goals.

Trapping BMPs are meant to be implemented in a voluntary, educational and promotion-based approach. This trapping BMP is the product of ongoing work that may be updated as additional traps are identified through future scientific testing. BMPs for trapping are not intended to replace trapper education programs. It is recommended that all trappers participate in a trapper education course. Trapping BMPs provide additional technical and practical information to help trappers and managers identify and select the best traps available for a given species and provide an overview of methods for proper use.

Criteria for the Evaluation of Restraining Foothold Devices for Trapping BMPs

For the purpose of developing trapping BMPs, thresholds were established by the Furbearer Resources Technical Work Group of the International Association of Fish and Wildlife Agencies for several trap performance criteria. These thresholds were derived from reference standards annexed to the 1997 understanding reached between the United States of America and the European Community, and with input from wildlife biologists and wildlife veterinarians involved in this effort. These thresholds provide a common framework for evaluating progress toward the use of more humane traps and trapping methods. Assessments of injury were undertaken in the furtherance of such common framework.

Animal Welfare

Two examples of trauma scales that can be used by a testing agency to determine a level of animal welfare performance for restraining traps are presented as guidelines in ISO Document 10990-5. One system allocates points to specific injuries and the other groups specific injuries into a series of classes of injuries from mild to severe. The primary species captured in traps that meet BMP performance criteria must have an average cumulative score of 55 points or less, and at least 70% of those in the sample must have no injuries described as being in the moderately severe or severe trauma classes.

Efficiency

Traps meeting BMP criteria must be able to capture and hold at least 60% of the primary species of interest that activate the trap. An activated trap is one that has been sprung.

$$\text{Efficiency} = \frac{\text{Number of captures of primary species of interest}}{\text{Number of traps sprung by primary species of interest}}$$

Traps were selected for testing based on their relative use among trappers surveyed by the International Association of Fish and Wildlife Agencies in 1992 and in consultation with wildlife biologists and expert trappers. Trap models that are commonly used, and modifications and new designs that may improve animal welfare, were given priority for testing. Traps were field tested by experienced local trappers during legal trapping seasons using daily trap checks, as required by most states in the eastern United States, to use a scientific design known to provide for the most accurate analysis possible.

All data were recorded by technicians accompanying the trappers. The teams worked under actual field conditions throughout the eastern United States. Wildlife veterinary pathologists from the University of Georgia or University of Wyoming examined captured animals for trap-related injuries through full-body necropsies following international trap testing guidelines. A minimum of 20 specimens were examined for each trap evaluated.

This trapping BMP is an ongoing work that may change as existing trap models are improved and additional models are tested. Criteria to identify BMP traps are standardized and those traps that meet these criteria are included in this document. Other BMPs address traps for other species and regions of the country.

Each region of the country has unique conditions that affect trapping, and BMPs are developed with this in mind. Both trappers and governmental agencies are encouraged to use the specific BMP traps best suited to their purposes. All trappers should consult state trapping regulations prior to trapping.

Selectivity

Traps should be set and used in a fashion that limits the risk of capturing non-furbearers, including domesticated animals, while increasing the chances of capturing desired furbearer species. Data concerning selectivity were collected in field studies and used to identify those traps that have features that influence selectivity. These features and any special considerations are provided in the Mechanical Description and Attributes section for each BMP designated trap, as well as in the Techniques and Suggestions sections of this document.

Practicality

Traps should be practical for use in the field under trapline conditions. Each trapper testing traps for the BMP project was asked for information regarding practicality after their experience testing each trap. These comments were then analyzed to detect any traps with consistently low scores.

Each trap was then evaluated by a panel of experienced trappers and wildlife biologists who also considered the following:

- current cost of initial purchase and maintenance
- replacement of parts, ease in setting and resetting
- ease of transport and storage
- weight and dimensions
- reliability
- versatility
- expected usable life-span.

Any special practicality considerations are described in the Mechanical Description and Attributes section for each BMP designated trap.

Safety

Traps should not present a significant risk to the user, and if necessary, should have appropriate safety features that can be used easily under normal trapline conditions. Each experienced trapper testing traps for the BMP project was asked to judge whether traps tested posed a threat to the user or others who might come into contact with the trap. Each trap was then evaluated by a panel of experienced trappers and wildlife biologists. Safety issues, if any, are described in more detail in the Mechanical Description and Attributes section for each BMP designated trap.

Additional Information for Trapping

Trap Tuning–Correct Trap Preparation and Maintenance

Inspection

Most new traps require some minor adjustments to operate correctly. New traps may have sharp edges or burrs that must be removed to minimize injuries to the trapped animal. Similarly, used traps and attachments should be inspected for wear before each season.

- Weak trap coil springs should be replaced (Figure1).
- Trap components, such as swivels, J-hooks, and S-hooks, must not be damaged and must operate freely without binding.
- Welding the ends of the hooks shut is recommended.
- Any sharp edges on trap jaws should be smoothed with a metal file.

Figure 1. Trap Components

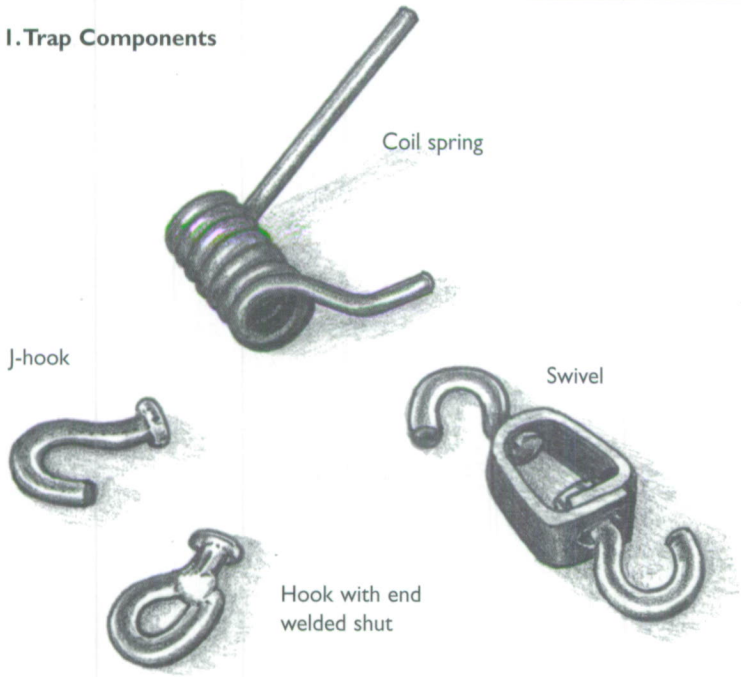

Leveling Trap Pans

When the trap is set, the trap pan should be level with the jaws (Figure 2). If the pan rests too high or too low, it should be adjusted manually. A level pan is important because it optimizes the angle of capture of the animal's leg.

Figure 2. Leveling trap pans

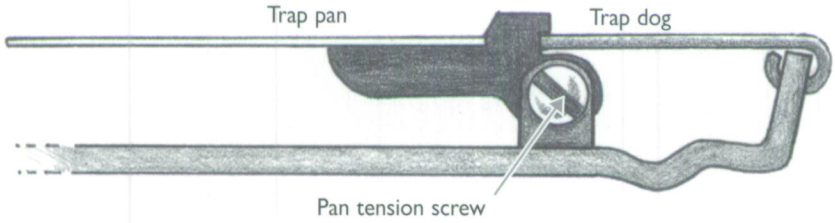

Trapping Techniques

Using the correct size and type of trap is essential to achieving a high level of efficiency and minimizing risk of injuring the captured animal. How the individual trapper chooses to use a trap is also critical.

Presented here are techniques and practices recommended by experienced trappers and wildlife biologists that will improve animal welfare, selectivity, efficiency, and user safety. These suggestions may be familiar to some, but new to others.

All trappers are strongly encouraged to use as many of these techniques as practical. More detailed information on these techniques is available through various trapper education manuals, manufacturer's documents, instructional videos, and trade publications.

Practice Suggestion

Careful placement and selection of baits and lures can greatly increase capture efficiency and selectivity. Wildlife species have differing responses to attractants. When using bait, make sure that the bait cannot be seen by birds. Small quantities of bait should be covered or placed in a hole where it is not visible. In addition, traps should not be placed near large carcasses. State regulations vary with regard to the use of animal carcass baits.

Proper Pan Tension

Pan tension influences trap selectivity. Most new traps have pan tension screws and most traps can be fitted with commercially available or home-made pan-tension devices. Pan tension can be adjusted so certain weights are required to depress the pan and trigger the trap. The pan will likely need readjustment after each capture. Devices for measuring pan tension are commercially available or may be easily constructed.

Short Pan Throw

The amount of space where the trap dog (trigger) fits into the pan notch determines how far the trap pan must drop before the trap activates (Figure 3). A short pan throw is beneficial when used in conjunction with a heavy pan tension.

Figure 3. Short pan throw

Arrows indicate the trap's action

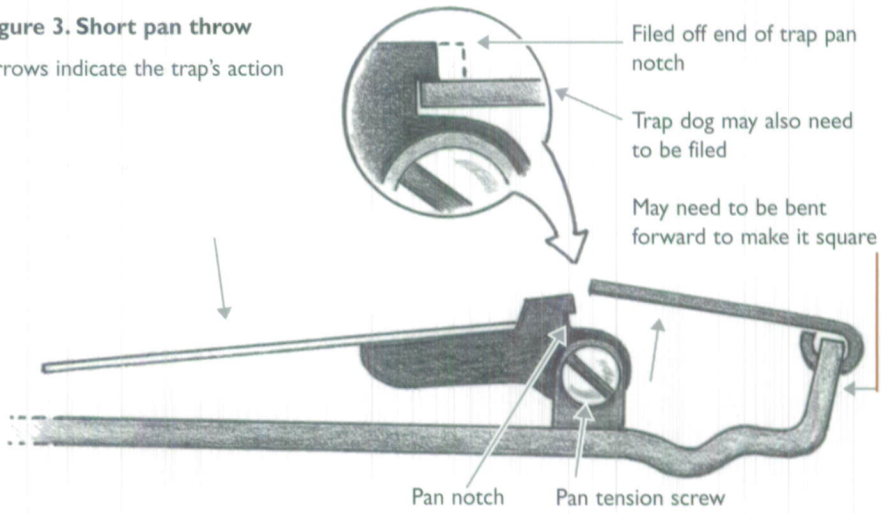

Trap Modifications

Several BMP traps are standard models that have been modified. Examples of modifications included are laminating and/or offsetting the jaws, adding extra springs, or reinforcing the base plate. Most trap manufacturers and suppliers now offer modified traps or will modify your traps upon request. Trappers can also modify their own traps to replicate the BMP trap models in this document. In any case, sturdy materials should be used to ensure long-term durability in the field.

Offset Jaws

Offset jaws contain a space between the gripping surfaces on the closed jaws of a foothold trap. Offset jaws increase the space between the jaws when closed. Typically, the offset ranges from 1/8 to 1/4 inch (Figures 4a and 4b).

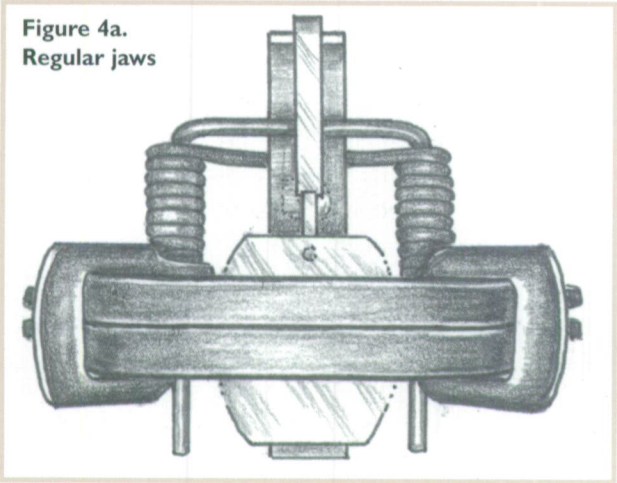
Figure 4a.
Regular jaws

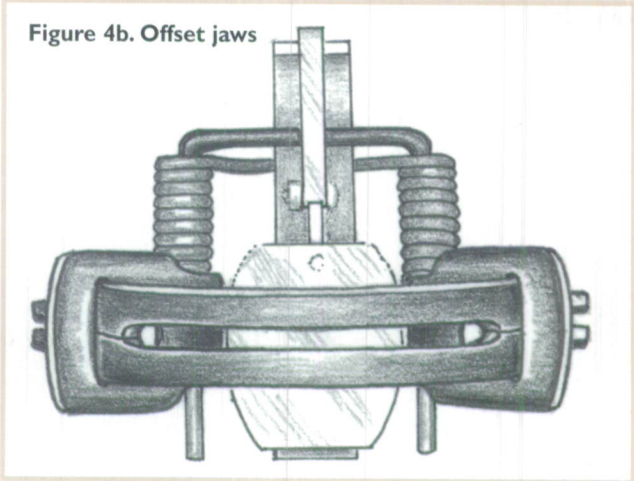
Figure 4b. Offset jaws

Lamination and Padding

Expanding the trap jaw thickness with lamination or the addition of rubber pads will increase the surface area of the jaw on a trapped animal's foot and may influence both animal injury and capture efficiency. Lamination may be attached above and/or below the trap jaws to expand the jaw thickness by welding on an additional strip of metal. Lamination is typically an after-market addition, though some trap suppliers provide this service. Padded traps are usually pre-fabricated. Replacement or repair of rubber pads may be required, especially after captures.

Additional Springs

Sufficient trap strength is needed to hold an animal's foot. Some traps may perform better with the addition of two springs, commonly referred to as "four-coiling." Four-coiling makes the trap more stable when bedded. Recommended spring strengths are provided in the Mechanical Description and Attributes Section for each trap evaluated.

Trap Safety

Restraining foothold devices have excellent safety records, but as with any other tools, precautions should be taken in handling them. Trappers should consider the use of gloves while setting traps.

Releasing or Dispatching Captured Animals

Restraining devices give trappers the option of either releasing or dispatching captured animals. Proper techniques need to be observed. These are best learned from a trapper education program or from experienced trappers.

Practice Suggestion

When adjusting pan tension on a foothold trap, the user should note that it should take about four pounds of weight to trigger a trap set for coyotes.

Practice Suggestions

Proper swiveling is the key to preventing the chain from binding at the stake, drag, or grapple. This is important because it minimizes injury to the captured animal. Aside from the swivel located under the trap, the anchoring system should include one or more swivels with one either in the middle of the chain and/or one at the anchor point. When using a foothold trap, the anchoring system should be attached in the center of the base plate of the trap.

Figure 5. Cross-staking method

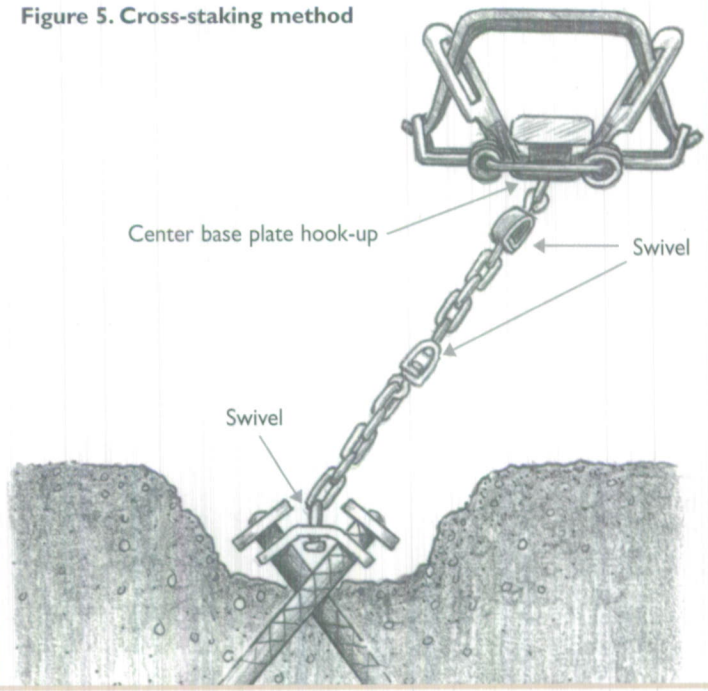

Trap Anchoring Systems

When stakes are used to anchor traps, they must be of sufficient length to prevent the captured animal from pulling the stake. If there is doubt that a stake will hold, use two stakes with a cross-staking method to ensure the stakes will not move after the catch (Figure 5). Cable stakes are also effective. Drags or grapples may be used effectively in some terrain and may also allow the captured animal to find cover. The use of shock springs on anchoring systems, whether they be stakes or drags, may reduce injury. Shock springs should be of high quality and adequate strength to resist a captured animal's ability to destroy the spring.

Set Location for Traps

Careful choice of trap location can influence animal welfare and the selectivity of trap sets. Trappers should choose set locations that:

- Minimize the captured animal's exposure to domestic animals and human activities;
- Prevent entanglement with fences or other objects that might result in injury;
- Minimize the capture of non-furbearers, particularly in residential areas;
- Avoid trails used by people.

The Eastern Coyote at a Glance

The eastern coyote (*Canis latrans)* is a medium to large member of the canine family (Figure 6). These animals are intelligent and adaptable animals occurring in a wide range of habitat conditions, including suburban and urban areas. Although coyote population trends vary across the east, they are an abundant mammal, expanding their range and becoming less wary of people; in recent years coyote attacks on people have been documented.

Figure 6. Eastern coyote *(Canis latrans)*

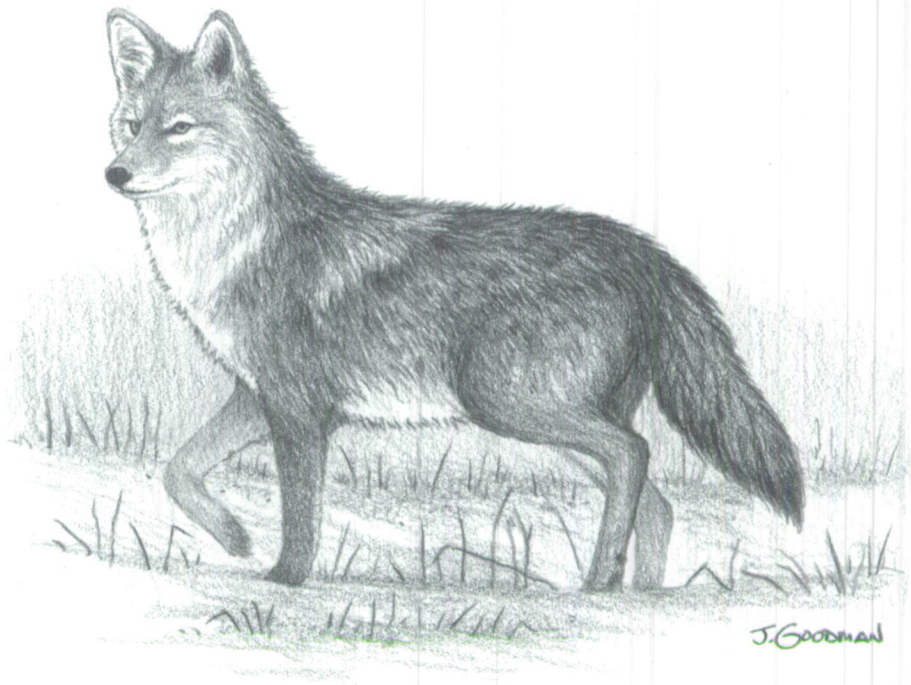

- In the eastern United States, adult coyotes average 30-38 pounds, but have been recorded as high as 60 pounds in some portions of their range. Adult males are generally larger than adult females. Coyote weight is reported to be heavier in the eastern states than in western states.
- Coyotes are found in a variety of habitats, from open areas to forested regions. They are found in sparsely populated rural areas and urban settings.
- Coyotes are opportunistic predators. They commonly prey upon small animals (mice, rabbits, reptiles, and insects), sometimes including pets, and often consume scavenged food items and carrion, as well as fruits, seeds, and other plant material. Coyotes can also kill large mammals such as white-tailed deer and livestock.
- Coyotes may range over an area of more than 10 square miles, depending on the time of year.
- Breeding starts in late-winter in the north and in winter in the south.
- Litter sizes average from 3 to 6 pups born about 60 days after breeding.

Although coyote population trends vary across the east, they are an abundant mammal, expanding their range and becoming less wary of people.

Specifications of Traps Meeting BMP Criteria for Coyotes in the Eastern United States

This list is provided for information purposes only, and does not imply an endorsement of any manufacturer. As more capture devices are tested and new information becomes available, they will be added to an updated list.

Traps with the following specifications meet or exceed the selection criteria previously described.

As more capture devices are tested and new information becomes available, they will be added to an updated list. Mechanical descriptions of tested traps are given as an aid to trappers or manufacturers who may wish to measure, build, or modify traps to meet these specifications (Figure 7a). Also, other commercially available traps, modified traps, or other capture devices not yet tested may perform as well as, or better than, the listed BMP traps.

Trap Category	Jaw/Frame Characteristics	Inside Jaw/ Frame Spread at Dog	Inside Width at Jaw/Frame Hinge Posts	Traps Tested—Examples
Coil-Spring Traps	Padded	4 1/2 – 4 15/16 inches	4 9/16 inches	Woodstream™ Victor No. 1 1/2 Softcatch 4-coiled
			6 7/16 inches	Woodstream™ Victor No. 3 Softcatch 4-coiled
	Plain jaw	5 – 5 1/2 inches	5 inches	Woodstream™ Victor No. 1.75 Woodstream™ Victor No. 2
	Offset, laminated, or wide jaw		4 3/4 – 5 9/16 inches	Sleepy Creek™ No. 1 3/4 Woodstream™ Victor No. 1.75 offset, laminated Bridger™ No. 2 square jaw, offset, laminated
	Offset, laminated, or wide jaw	5 1/2 inches	6 3/8 inches	Bridger™ No. 3 modified offset, double laminated
Cable Restraint	Smooth, round rod, 1/8 inch cable	6 – 6 3/8 inches	5 3/4 inches	Belisle™ Foot Snare

These are average mechanical measurements which are rounded to the nearest 1/16 inch. There may be up to 1/8 inch variation in specifications on the part of the manufacturer.

Figure 7a. Generic coil-spring trap

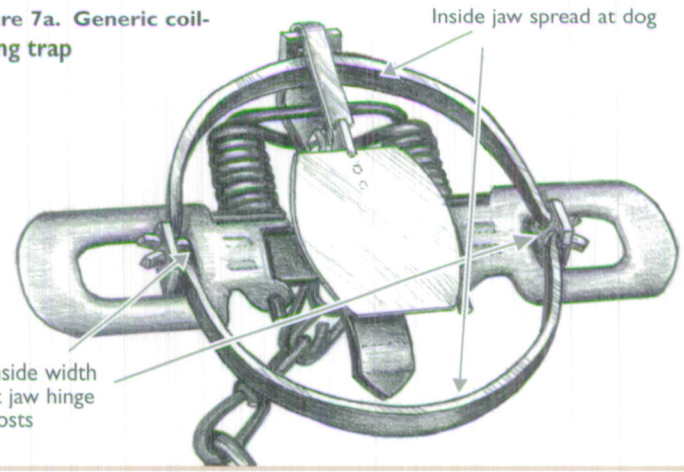

Manufacturers use recognizable names, such as "No. 2" coil-spring, to identify certain traps. However, there is no standardized system linking mechanical design features with trap names. References to trap names are provided to identify the specific traps tested. The mechanical features of these traps are listed so that similar traps may be identified (Figures 7b and 7c).

The performance of anchoring systems was not specifically evaluated. However, methods of attachment are described for informational purposes.

Figure 7b. Generic coil-spring trap (open)

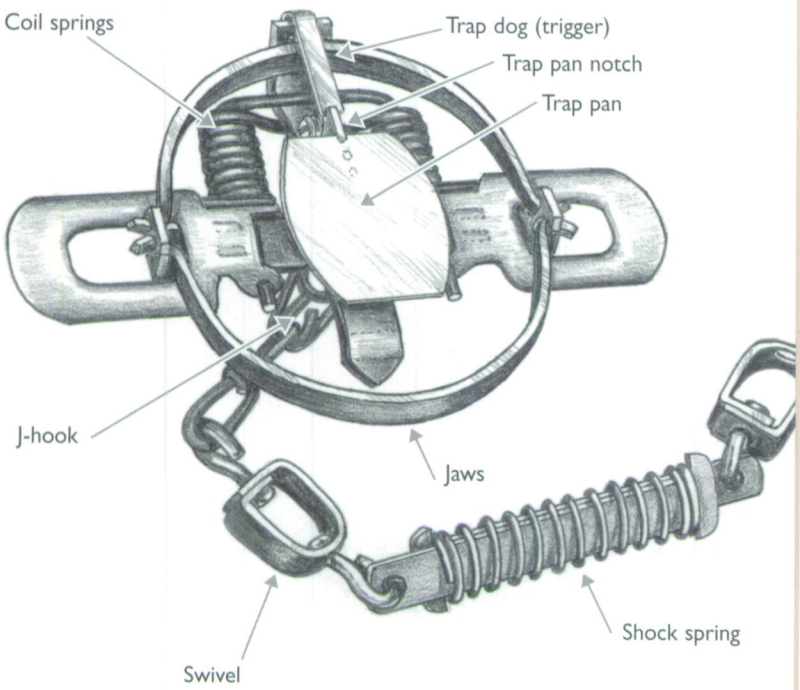

Figure 7c. Generic coil-spring trap (closed)

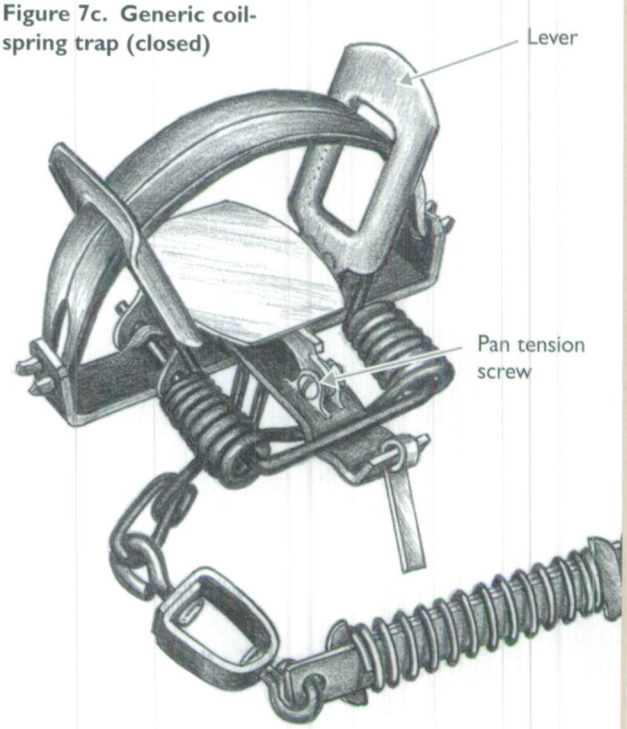

Figure 8a. Woodstream™ Victor No. 1 1/2 Softcatch 4-coiled (open)

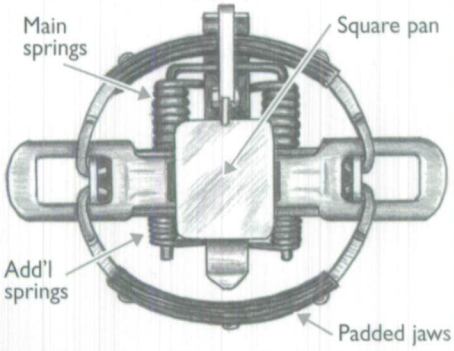

Figure 8b. closed

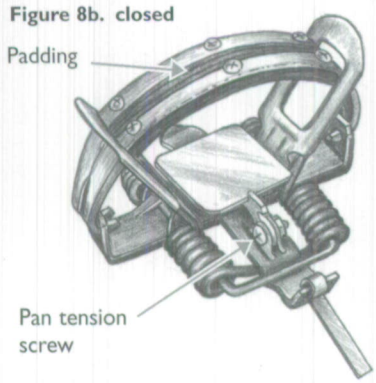

Figure 9a. Woodstream™ Victor No. 3 Softcatch 4-coiled (open)

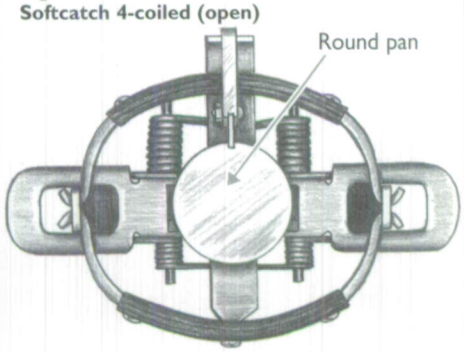

Figure 9b. closed

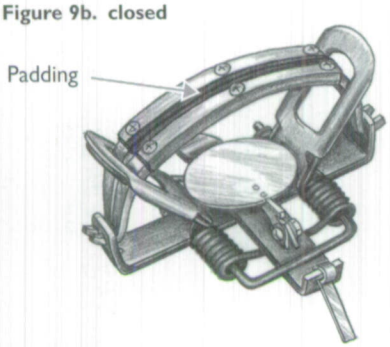

Padded jaws

Average Mechanical Description and Attributes

Inside jaw spread (at dog): 4 1/2 inches
Inner width: 4 7/8 inches
Inside width at jaw hinge posts: 4 9/16 inches
Jaw width: 9/16 inch round padded jaw
Jaw thickness: 3/8 inch
Padding: Manufacturer supplied rubber pads
Main trap springs: Two 0.131 inch wire-diameter springs
Additional springs: Two 0.100 inch wire-diameter springs
Base plate: Double-enforced plate with D-ring
Average velocity: 69.93 feet per second (ft/s)
Clamping force at 0.8 inches: 32.8 lb.

Any trap that meets these specifications is considered a BMP trap, regardless of brand or source of modifications. The trap tested was the Woodstream™ Victor No. 1 1/2 Softcatch modified coil-spring, four-coiled (Figures 8a and 8b).

Additional Information

- Chain attachment used in the trap testing: 7 1/2 inch center-mounted with two swivels, one shock spring, and anchored with a stake.
- Selectivity features: Brass pan tension machine screw.
- Special considerations for practicality: Some damage to trap pads should be expected and will require occasional replacement as a normal part of trap maintenance and upkeep. Special care should be taken to prevent odor contamination of the rubber jaws. Avoid using petroleum-based dye directly on the rubber pads.

Average Mechanical Description and Attributes

Inside jaw spread (at dog): 4 15/16 inches
Inner width: 6 1/16 inches
Inside width at jaw hinge posts: 6 7/16 inches
Jaw width: 9/16 inch round padded jaw
Jaw thickness: 3/8 inch
Padding: manufacturer supplied rubber pads
Main trap springs: Two 0.145 inch wire-diameter springs
Additional springs: Two 0.115 inch wire-diameter springs
Base plate: Double-enforced plate with D-ring
Average velocity: 70.16 feet per second (ft/s)
Clamping force at 0.8 inches: 45.33 lb

Any trap that meets these specifications is considered a BMP trap, regardless of brand or source of modifications. The trap tested was the Woodstream™ Victor No. 3 Softcatch modified coil-spring, four-coiled (Figures 9a and 9b).

Additional Information

- Chain attachment used in trap testing: 18 inch center-mounted with three swivels, two shock springs, and anchored with a stake.
- Selectivity features: Brass pan tension machine screw.
- Special considerations for practicality: Some damage to trap pads should be expected and will require occasional replacement as a normal part of trap maintenance and upkeep. Special care should be taken to prevent odor contamination of the rubber jaws. Avoid using petroleum-based dye directly on the rubber pads.

COIL-SPRING TRAPS Inside jaw spread of 5–5½ inches

Plain jaws

Average Mechanical Description and Attributes
Inside jaw spread (at dog): 5¼ inches
Inner width: 4⁹⁄₁₆ inches
Inside width at jaw hinge posts: 5 inches
Jaw width: ½ inch smooth round jaw
Jaw thickness: ⅛ inch
Main trap springs: Two 0.145 inch wire-diameter springs
Base plate: Not reinforced
Average velocity: 83.66 feet per second (ft/s)
Clamping force at 0.8 inches: 27.8 lb.

Any trap that meets these specifications is considered a BMP trap, regardless of brand or source of modifications. The trap tested was the Woodstream™ Victor No. 1.75 coil-spring (Figures 10a and 10b).

Additional Information

- Chain attachment used in trap testing: 9½ inch center-mounted with two swivels, one shock spring, and anchored with a stake.
- Selectivity features: Brass pan tension machine screw.

Figure 10a. Woodstream™ Victor No. 1.75 coil-spring (open)

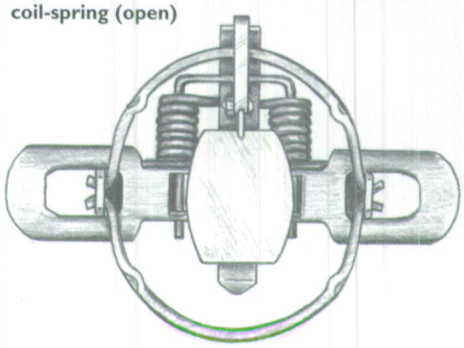

Figure 10b. closed

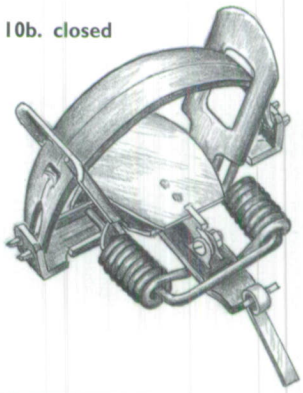

Average Mechanical Description and Attributes
Inside jaw spread (at dog): 5 inches
Inner width: 4½ inches
Inside width at jaw hinge posts: 5 inches
Jaw width: ½ inch smooth round jaw
Jaw thickness: ⅛ inch
Main trap springs: Two 0.145 inch wire-diameter springs
Base plate: Not reinforced
Average velocity: 79.42 feet per second (ft/s)
Clamping force at 0.8 inches: 30.67 lb.

Any trap that meets these specifications is considered a BMP trap, regardless of brand or source of modifications. The trap tested was the Woodstream™ Victor No. 2 coil-spring (Figures 11a and 11b).

Additional Information:

- Chain attachment used in trap testing: 6 inch center-mounted with two swivels and anchored with a stake.
- Selectivity features: Brass pan tension machine screw.

Figure 11a. Woodstream™ Victor No. 2 coil-spring (open)

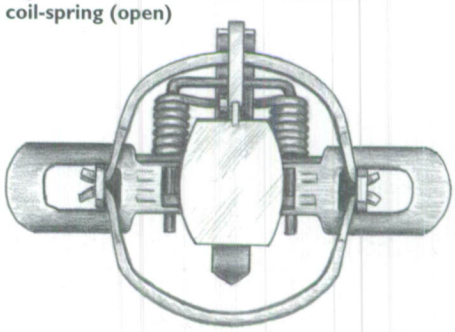

Figure 11b. closed

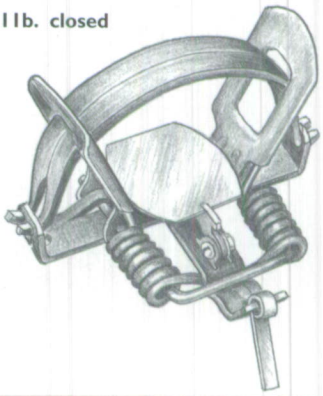

Figure 12a. Sleepy Creek™ No. 1¾ coil-spring (open)

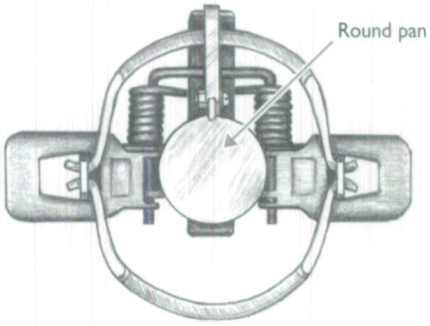

Figure 12b. closed

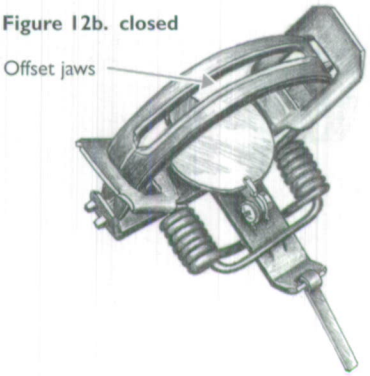

Offset laminated jaws or offset wide jaws

Average Mechanical Description and Attributes

Inside jaw spread (at dog): 5 1/16 inches
Inner width: 4 5/16 inches
Inside width at jaw hinge posts: 4¾ inches
Jaw width: ⅜ inch smooth oval jaw
Jaw thickness: ¼ inch
Jaw offset: 3/16 inch
Main trap springs: two 0.145 inch wire-diameter springs
Base plate: Not reinforced
Average velocity: 88.68 feet per second (ft/s)
Clamping force at 0.8 inches: 22.2 lb.

Any trap that meets these specifications is considered a BMP trap, regardless of brand or source of modifications. The trap tested was the Sleepy Creek™ No. 1¾ coil-spring (Figures 12a and 12b).

Additional Information

- Chain attachment on traps tested: 9½ inch center-mounted with two swivels, one shock spring, and anchored with a stake.
- Selectivity features: Brass pan tension machine screw.

Figure 13a. Woodstream™ Victor No. 1.75 offset laminated coil-spring (open)

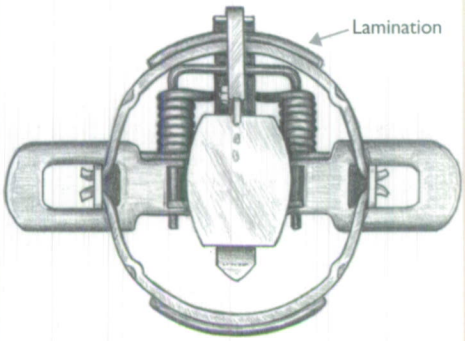

Figure 13b. closed

Average Mechanical Description and Attributes

Inside jaw spread (at dog): 5 1/16 inches
Inner width: 4 9/16 inches
Inside width at jaw hinge posts: 5 1/16 inches
Jaw width: 7/16 inch wide, smooth round jaw
Jaw thickness: 5/16 inch
Jaw thickness with lamination: ½ inch
Lamination: 3/16 inch above-jaw lamination
Jaw offset: 3/16 inch
Main trap springs: Two 0.135 inch wire-diameter springs
Base plate: Not reinforced
Average velocity: 78.90 feet per second (ft/s)
Clamping force at 0.8 inches: 36.93 lb.

Any trap that meets these specifications is considered a BMP trap, regardless of brand or source of modifications. The trap tested was the Woodstream™ Victor No. 1.75 coil-spring trap modified with offset, laminated jaws (lamination on top) (Figures 13a and 13b).

Additional Information

- Chain attachment used in trap testing: 9½ inch center-mounted with two swivels, one shock spring, and anchored with a stake.
- Selectivity features: Brass pan tension machine screw.

COIL-SPRING TRAPS Inside jaw spread of 5–5½ inches

Average Mechanical Description and Attributes

Inside jaw spread (at dog): 5½ inches
Inside jaw spread (between below-jaw lamination): 5 inches
Inner width: 5 1/16 inches
Inside width at jaw hinge posts: 5 9/16 inches
Jaw width: 7/16 inch hexagonal jaw
Jaw thickness: 3/16 inch
Jaw thickness with lamination: 7/16 inches
Lamination: ¼ inch
Jaw offset: 3/16 inch
Main trap springs: Two 0.145 inch wire-diameter springs
Additional springs: Two 0.11 inch wire-diameter springs
Base plate: Double-enforced plate with D-ring
Average velocity: 61.56 feet per second (ft/s)
Clamping force at 0.8 inches: 44.93 lb.

Any trap that meets these specifications is considered a BMP trap, regardless of brand or source of modifications. The trap tested was the Bridger™ No. 2 modified with square jaw, offset laminated coil-spring, four-coiled (lamination on bottom of jaw) (Figures 14a and 14b).

Additional Information

- Chain attachment used in trap testing: 18 inch center-mounted with three swivels, two shock springs, and anchored with a stake.
- Selectivity features: Brass pan tension machine screw.

Figure 14a. Bridger™ No. 2 offset laminated coil-spring (open)

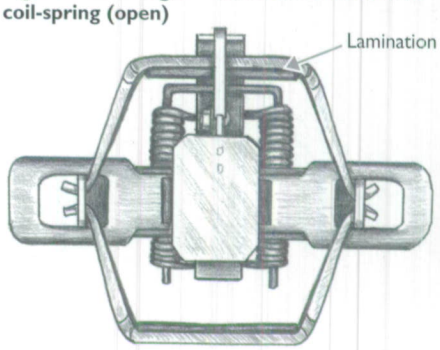

Figure 14b. closed

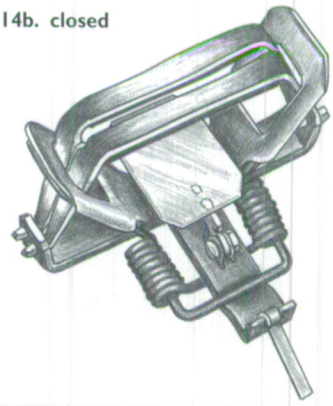

Average Mechanical Description and Attributes

Inside jaw spread (at dog): 5½ inches
Inside jaw spread (between below-jaw lamination): 5 inches
Inner width: 6 inches
Inside width at jaw hinge posts: 6⅜ inches
Jaw width: ½ inch hexagonal jaw
Jaw thickness: 3/16 inch
Jaw thickness with lamination: ⅝ inch
Lamination: 3/16 inch above-jaw, ¼ inch below-jaw
Jaw offset: ¼ inch
Main trap springs: Two 0.16 inch wire-diameter springs
Additional springs: Two 0.115 inch wire-diameter springs
Base plate: Double-enforced plate with D-ring
Average velocity: 64.52 feet per second (ft/s)
Clamping force at 0.8 inches: 49.2 lb.

Any trap that meets these specifications is considered a BMP trap, regardless of brand or source of modifications. The trap tested was the Bridger™ No. 3 modified offset (by manufacturer), double laminated, coil-spring, four-coiled (Figures 15a and 15b).

Additional Information

- Chain attachment used in trap testing (done in Canada): 18 inch center-mounted with three swivels, two shock springs, and attached to a metal grapple.
- Selectivity features: Brass pan tension machine screw.

Figure 15a. Bridger™ No. 3 offset laminated coil-spring (open)

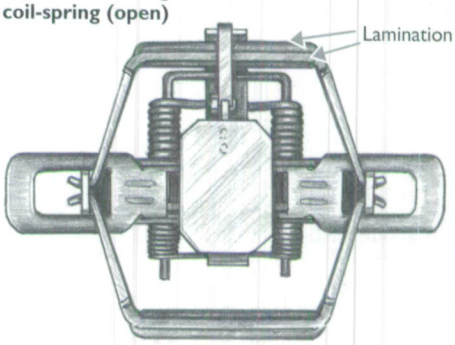

Figure 15b. closed

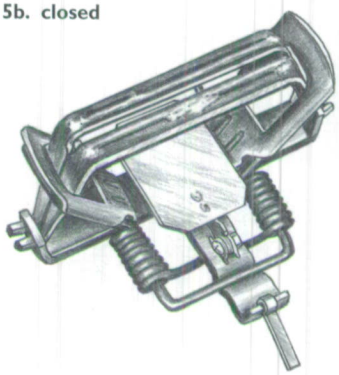

COIL-SPRING ACTIVATED CABLE RESTRAINT

Inside frame spread approx. 6–6 3/8 inches

Average Mechanical Description and Attributes

Inside cable retention frame spread (at dog): 6 3/8 inches
Inner width: 5 3/4 inches
Inside width at frame hinge posts: Measurement not available
Cable retention frame width: 1/8 inch, smooth round rod
Cable retention frame thickness: 1/8 inch rod
Main trap springs: Two 0.188 inch wire-diameter rod quick-release springs
Cable diameter: 1/8 inch cable
Cable loop stop size: 2 inches
Base plate: Not reinforced
Average velocity: 87.88 feet per second (ft/s)

Any device that meets these specifications is considered a BMP device, regardless of brand or source of modifications. The trap tested was the Belisle™ Foot Snare (Figures 16a and 16b).

Additional Information

- Cable attachment on device tested: swivel and lunge spring with a cable anchor.
- Selectivity features: Pan tension machine screw; large cable diameter and available plastic sleeve work to prevent the cable from closing to a small diameter, thus allowing small animals such as squirrels, skunks, and some raccoons to escape.
- Special considerations for practicality: Some damage and kinking of cables should be expected and will require frequent replacement as a normal part of trap maintenance and upkeep.

Figure 16a. Belisle™ Foot Snare

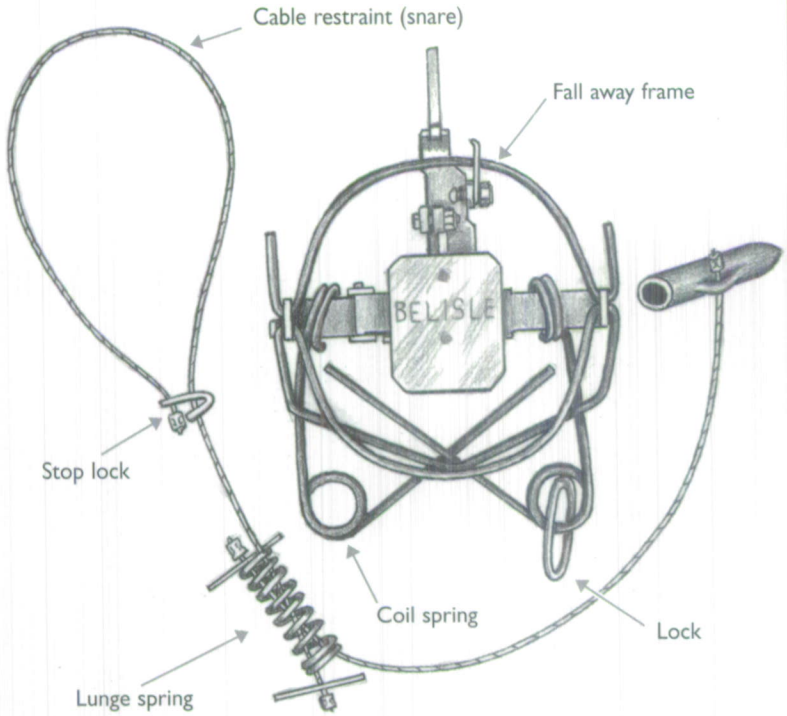

Figure 16b. Set

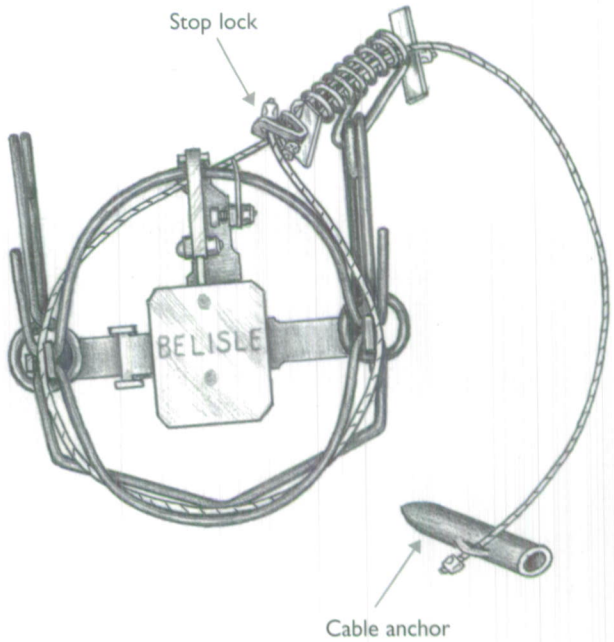

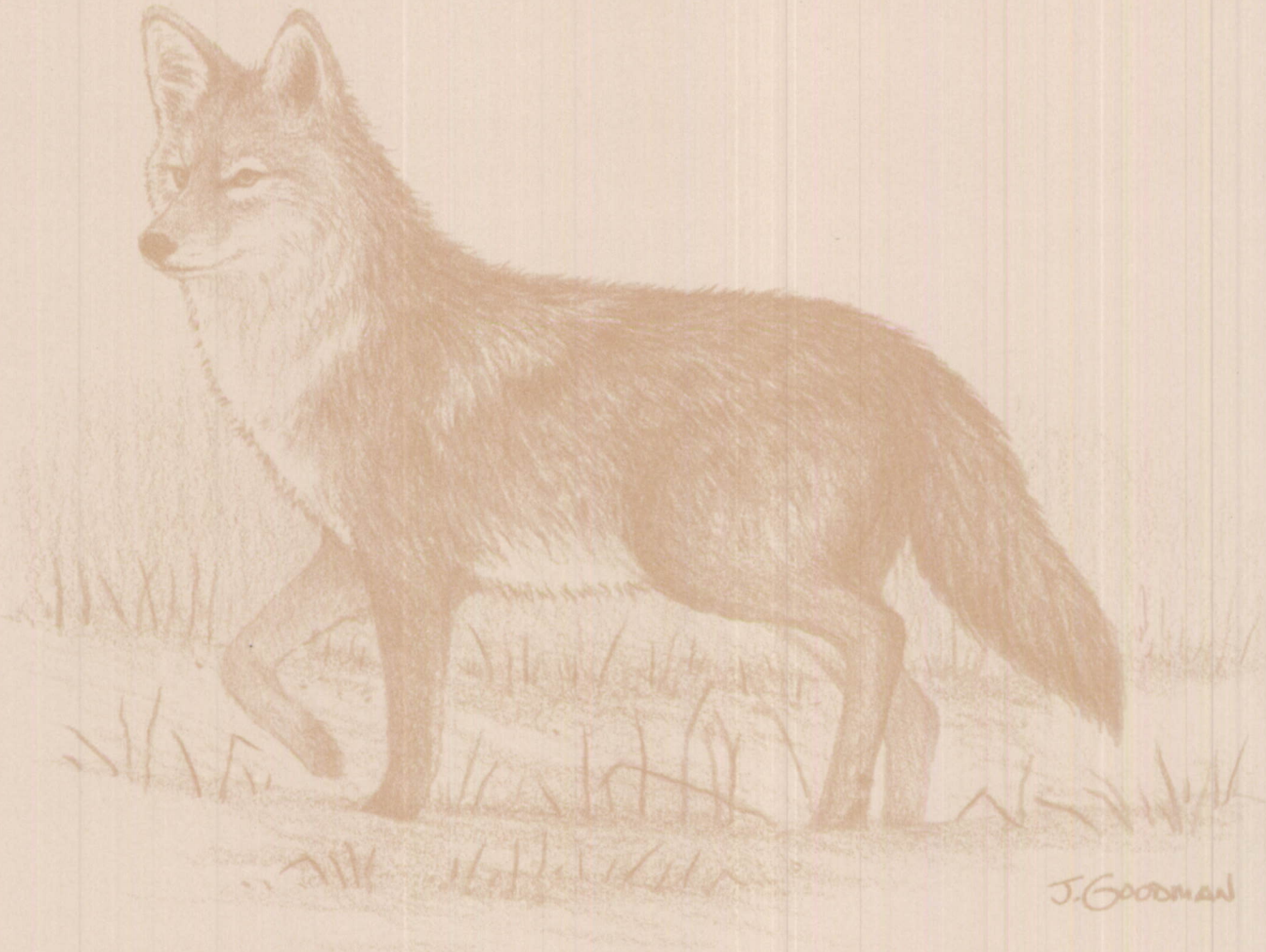
J. GOODMAN

International Association of Fish and Wildlife Agencies
Furbearer Resources Technical Work Group
444 North Capitol St., NW, Suite 544
Washington, DC 20001
www.furbearermgmt.org
March 2003