Coastal Management Program

160 N. LaSalle Street, Suite S-700 • Chicago, Illinois 60601 • http://www.dnr.illinois.gov/cmp

PUBLIC NOTICE

To Dredge 110,000 Cubic Yards of Material from the Waukegan Outer Harbor by the U.S. Army Corps of Engineers, in Lake Michigan, in Lake County

The U.S. Army Corps of Engineers 111 N. Canal Street, 6th Floor, Chicago, Illinois 60606 has applied for an Illinois Coastal Management Program Federal Consistency Determination to dredge 110,000 cubic yards of material from the Waukegan Harbor Outer Harbor in Lake Michigan and dispose of it upland approximately 3500 ft away at the Waukegan Coke Plant property in Waukegan, Illinois in Lake County Illinois.

The applicant proposes to mechanically dredge 110,000 cubic yards of material from the bed of Lake Michigan and transport it in sealed barges for disposal at the Waukegan Coke Plant property (WCP) located in Waukegan Harbor. The material will be stored at the WCP in a diked or bermed area to prevent runoff. The dredged material is anticipated to be used as general cover material on the WCP.

Plans for the work may be seen at the Office of Water Resources, Chicago Office, Michael A. Bilandic Building, 160 N. LaSalle Street, Suite S-703, Chicago, Illinois 60601. Inquires and requests to review the plans may be directed to Jim Casey of the Chicago Office at (312) 793-5947 or james.casey@illinois.gov.

You are invited to send written comments regarding the work to the Chicago Office by May 29, 2013. Any comments asserting that the proposed action does not meet federal consistency must specifically reference the state law that would be violated.

April 30, 2013

DEPARTMENT OF THE ARMY
CHICAGO DISTRICT, U.S. ARMY CORPS OF ENGINEERS
111 NORTH CANAL STREET
CHICAGO IL 60606-7206

REPLY TO
ATTENTION OF

17 APR 2013

Planning Branch

Federal Consistency Coordinator
Illinois Coastal Management Program
Illinois Department of Natural Resources
160 N LaSalle, Ste 700
Chicago IL 60601
Attn: Mr. James Casey

Dear Mr. Casey:

The Chicago District is preparing a Dredged Material Management Plan to evaluate dredging and disposal options at Waukegan Harbor in Waukegan, Lake County, Illinois. As part of the planning process, the Chicago District would appreciate your comments. A map of the project area is enclosed.

The project area is comprised of the Outer Harbor portion of Waukegan Harbor and approximately 22 acres at the former Waukegan Manufactured Gas & Coke Plant property, which is located adjacent to the harbor. The project consists of mechanically dredging approximately 100,000 cubic yards of sediment from the Outer Harbor and transporting it to the adjacent Coke Plant site where it would be dewatered and stabilized before being turned over to the City of Waukegan for use as clean fill material. The sediment was found to meet IEPA requirements for unconfined upland use but does not meet water quality standards for Lake Michigan and therefore is not acceptable to be discharged back into the lake. The proposed activity is expected to commence in August 2013 and extend for approximately 3 months.

The proposed activity complies with Illinois' approved coastal management program and will be conducted in a manner consistent with such policies. Please address any comments or questions to Mr. Peter Bullock, US Army Corps of Engineers, 111 N Canal St, Suite 600, Chicago, IL 60606. Mr. Bullock can also be reached at 312-846-5587 or at Peter.Y.Bullock@usace.army.mil.

RECEIVED
APR 18 2013
OFFICE OF WATER RESOURCES
DIVISION OF RESOURCE MANAGEMENT

Sincerely,

Susanne J. Davis, P.E.
Chief, Planning Branch

Enclosure

Waukegan Outer Harbor Dredging

U.S. Army Corps of Engineers
Chicago District

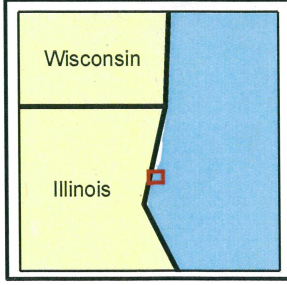

0 750 1,500 3,000 Feet

N
W E
S

US Army Corps of Engineers®
Chicago District

WAUKEGAN OUTER HARBOR
INTERIM DREDGED MATERIAL MANAGEMENT PLAN

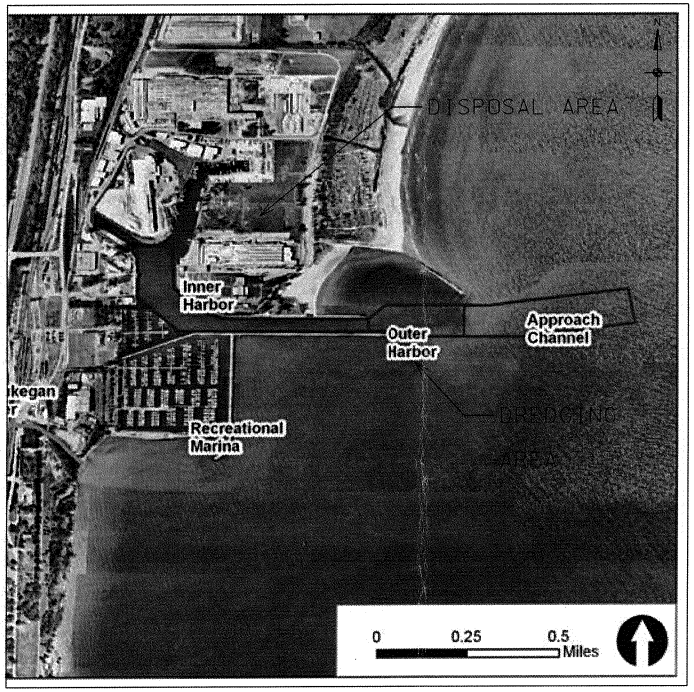

LOCATION MAP
(N.T.S.)

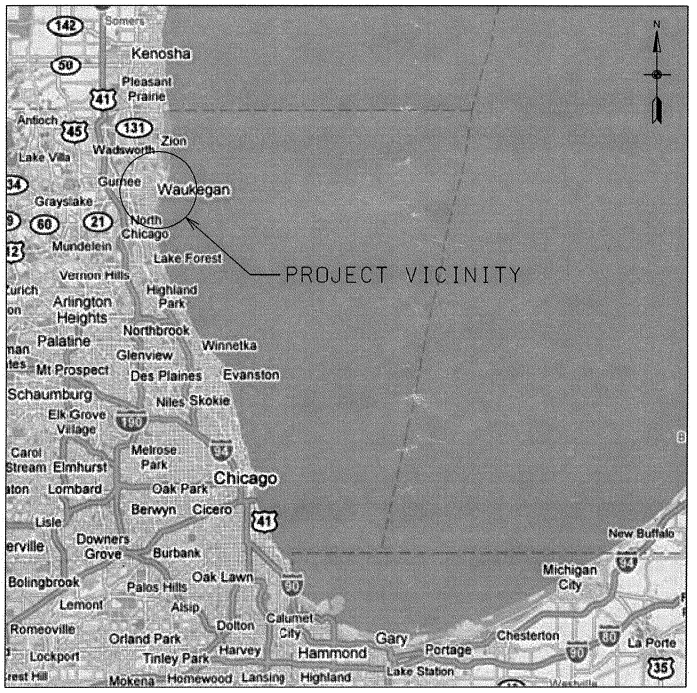

VICINITY MAP
(N.T.S.)

Preliminary Submittal - 50% Drawings
APRIL 2013

SIGNATURE AFFIXED BELOW INDICATE OFFICIAL RECOMMENDATION AND APPROVAL FOR ALL DRAWINGS CONTAINED IN THE SHEET INDEX.

APPROVAL RECOMMENDED BY:

PROJECT MANAGER DATE

APPROVED BY:

CHIEF, DESIGN BRANCH DATE

THIS PROJECT WAS DESIGNED BY THE CHICAGO DISTRICT CORPS OF ENGINEERS. THE INITIALS OR SIGNATURES AND REGISTRATION DESIGNATIONS OF INDIVIDUALS APPEAR ON THESE PROJECT DOCUMENTS WITHIN THE SCOPE OF THEIR EMPLOYMENT AS REQUIRED BY ER 1110-1-8152. SIGNATURES INDICATE OFFICIAL RECOMMENDATION OF ALL DRAWINGS IN THIS SET.

REVIEWED BY:

ATR TEAM LEADER DATE

US Army Corps of Engineers®

MARK	DESCRIPTION	TRACKING NO.	ACTION	DATE
A	DELETED SECTION F	M002	PM	NOV 12
B	REVISED SECTIONS A, C, AND E	M001	P0001	NOV 12

U.S. ARMY CORPS OF ENGINEERS
CHICAGO DISTRICT
CHICAGO, IL

DESIGNED BY: LAURA VANDEN BERG
DWN BY: LCV
CKD BY: CRD
SUBMITTED BY: JOHN GROBOSKI, P.E.
PLOT SCALE: 1" = 1'
PLOT DATE:
SIZE: ANSI D
FILE NAME: WN03DDY12P5_G-001.DGN
DATE: 6/28/12
SOLICITATION NO.:
CONTRACT NO.:
FILE NUMBER:

WAUKEGAN OUTER HARBOR
INTERIM DREDGED MATERIAL MANAGEMENT PLAN
WAUKEGAN, IL

PROJECT, LOCALITY & VICINITY MAP

SHEET IDENTIFICATION
G-001
SHEET 1 OF 5

HORIZONTAL & VERTICAL CONTROL POINTS					
POINT	IL EAST NAD83 STATEPLANE COORDINATES		ELEV. LGLD85	ELEV.	DESCRIPTION
	NORTHING (Y)	EASTING (X)			
79-2	2074476.546	1122631.908	584.41		STANDARD ARMY CORPS DISK
79-3	2074460.551	1124760.321	585.58		STANDARD ARMY CORPS DISK
79-4	2075084.892	1125464.667	583.29		STANDARD ARMY CORPS DISK
79-7	2074734.916	1123254.909	585.67		STANDARD ARMY CORPS DISK

GENERAL NOTES

1. THE SURVEY CONDITIONS SHOWN ON THESE DRAWINGS ARE FROM A OCT 2009 SURVEY PERFORMED BY USACE AND REPRESENTS CONDITIONS EXISTING AT THAT TIME. EXISTING CONDITIONS DURING CONSTRUCTION MAY VARY AND DIFFER FROM THOSE SHOWN. THE CONTRACTOR SHALL TAKE ALL NECESSARY ACTIONS TO ASSESS THE EXISTING CONDITIONS AT THE TIME OF BIDDING, AND INCLUDE COST ACCORDINGLY IN THE BID.
2. ALL COORDINATES SHOWN ARE REFERENCED TO THE ILLINOIS STATE PLANE COORDINATE SYSTEM, EAST ZONE, NORTH AMERICAN DATUM OF 1983 (NAD83) U.S. FEET.
3. ALL ELEVATIONS SHOWN ARE REFERENCED TO THE INTERNATIONAL GREAT LAKES DATUM OF 1985 (LGLD85) U.S. FEET.
4. ALL HORIZONTAL AND VERTICAL CONTROL POINTS ARE REFERENCED TO NGS MONUMENT DG8501.

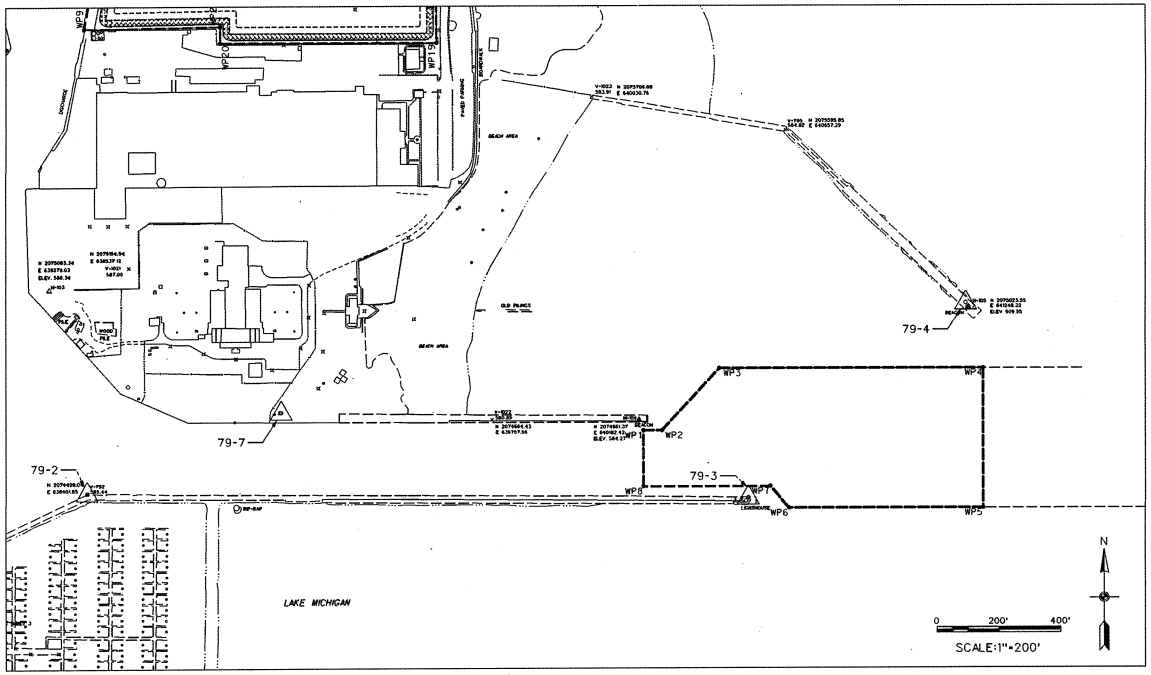

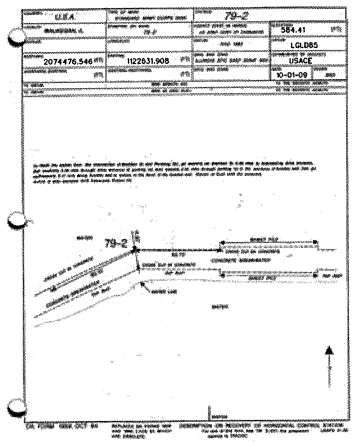

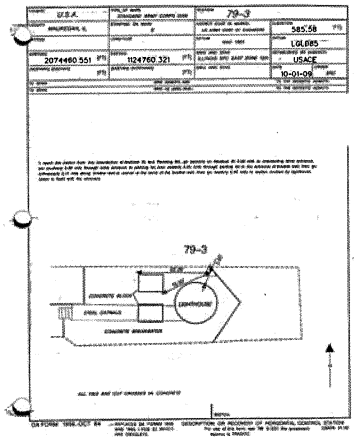

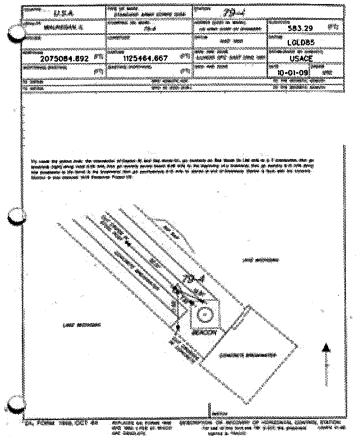

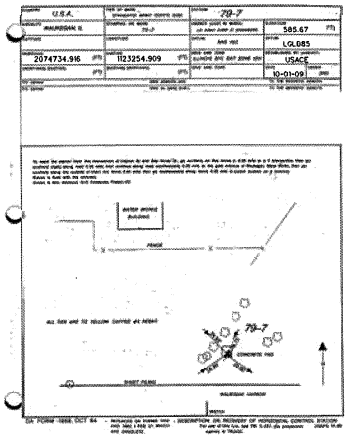

US Army Corps of Engineers®

MARK	DESCRIPTION	TRACKING NO.	ACTION	DATE
A	DELETED SECTION F	MD72	PM	NOV'13
B	REVISED SECTIONS A, C, AND E	MD51	PD01	NOV'13

DESIGNED BY: PAUL VANDENBERG
DRN BY: CHD
CHK BY: JOHN GERDESKI, P.E.
QA/QC BY: TITLE: CHD
DATE: NOV 13
SOLICITATION NO.:
CONTRACT NO.:
PLOT SCALE: 1"=200'
PLOT DATE: 11/2013
FILE NUMBER: 1000005
FILE NAME: WHR000Y12PS_G002
ASSIS D

WAUKEGAN OUTER HARBOR
INTERIM DREDGED MATERIAL MANAGEMENT PLAN
WAUKEGAN, IL

SURVEY CONTROL AND BENCHMARKS

SHEET IDENTIFICATION
G-002
SHEET 2 OF 5

PLAN VIEW
SCALE: 1"= 150FT

WORK POINTS: DREDGING LIMITS		
POINT	NORTHING	EASTING
WP1	2074671.00	1124421.69
WP2	2074670.76	1124481.51
WP3	2074870.65	1124666.80
WP4	2074870.93	1125519.48
WP5	2074420.96	1125519.78
WP6	2074420.84	1124891.23
WP7	2074490.15	1124831.32
WP8	2074490.98	1124421.38

NOTES:

1. ALL ELEVATIONS ARE IN FEET AND ARE REFERENCES TO LOW WATER DATUM (LWD), LAKE MICHIGAN. 0.0 FEET LWD HAS AN ELEVATION OF 577.84 FEET (VERIFY) ABOVE THE REFERENCE PLANE AT RIMOUSKI, QUEBEC, INTERNATIONAL GREAT LAKES DATUM (IGLD) 1985. ALL COORDINATES ARE REFERENCED TO ILLINOIS STATE PLAN COORDINATE SYSTEM, EAST ZONE, 1983 NORTH AMERICAN DATUM (FT).
2. THE INFORMATION DEPICTED ON THIS MAP REPRESENTS THE RESULTS OF THE SURVEY MADE ON MARCH 31 2012 AND CAN ONLY BE CONSIDERED AS INDICATING THE GENERAL CONDITIONS EXISTING AT THAT TIME.
3. ESTIMATED DREDGING QUANTITY IS 96,400 CY.
4. UNELSS OTHERWISE NOTED PROJECT DEPTH IS 22.0' BELOW LOW WATER DATUM.

0 200' 400'
SCALE:1"=200'

US Army Corps of Engineers®

MARK	DESCRIPTION	TRACKING NO.	ACTION	DATE
A	DELETED SECTION F	M029	PM	NOV 13
B	REVISED SECTIONS A, C, AND E	M031	P2003	NOV 13

DESIGNED BY: LAURA VANDEN BERG
DRAWN BY: LCV
SUBMITTED BY: JOHN GEORGESKI, P.E.
PLOT SCALE: AS SHOWN
SIZE: ANSI D
DATE: 6/28/12
CAD BY: CADD
PLOT DATE: AUTO DATE
FILE NAME: WAKEGDDR12P8_C-001
SOLICITATION NO.:
CONTRACT NO.:
FILE NUMBER:

WAUKEGAN OUTER HARBOR
INTERIM DREDGED MATERIAL MANAGEMENT PLAN
WAUKEGAN, IL

EXISTING CONDITIONS AND DREDGE LIMITS

SHEET IDENTIFICATION
C-001
SHEET 3 OF 5

WORK POINTS: DISPOSAL AREA		
WORK POINT	NORTHING	EASTING
WP9	2075969.62	1122618.68
WP10	2076570.45	1122733.64
WP11	2076563.05	1123529.99
WP12	2076960.98	1123527.72
WP13	2077238.67	1123527.34
WP14	2077237.91	1123808.04
WP15	2077163.31	1123875.17
WP16	2077100.50	1123867.08
WP17	2076697.24	1123815.03
WP18	2076044.49	1123753.38
WP19	2075923.41	1123753.38
WP20	2075923.41	1123056.88
WP21	2075975.52	1123056.88

NOTES:

1. ALL COORDINATES ARE REFERENCED TO ILLINOIS STATE PLANE COORDINATE SYSTEM, EAST ZONE, 1983 NORTH AMERICAN DATUM (FT).
2. THE INFORMATION DEPICTED ON THIS MAP IS BASED ON GEOSPATIAL PARCEL DATA AND CAN ONLY BE CONSIDERED AS INDICATING THE GENERAL CONDITIONS OF THE SITE.

US Army Corps of Engineers

MARK	DESCRIPTION	TRACKING NO.	ACTION	DATE
5	DELETED SECTION F	M002	PM	NOV 12
4	REVISED SECTIONS A, C, AND E	M001	P0001	NOV 12

U.S. ARMY CORPS OF ENGINEERS
CHICAGO DISTRICT
CHICAGO, IL

DESIGNED BY: LAURA VANDEN BERG
DWN BY: LCV
CKD BY: CKD
SUBMITTED BY: JOHN GROBOSKI, P.E.
PLOT SCALE: 1" = 200'
PLOT DATE:
SIZE: ANSI D
FILE NAME: WHD3DDY12PS_C-002
DATE: 6/28/12
SOLICITATION NO.:
CONTRACT NO.:
FILE NUMBER:

WAUKEGAN OUTER HARBOR
INETERIM DREDGED MATERIAL MANAGEMENT PLAN
WAUKEGAN, IL

DISPOSAL AREA WORK LIMITS

SHEET IDENTIFICATION
C-002
SHEET 4 OF 6

PLAN VIEW

1" = 100 FT

LEGEND

MW — EXISTING MONITORING WELL

GRAVEL ACCESS ROAD

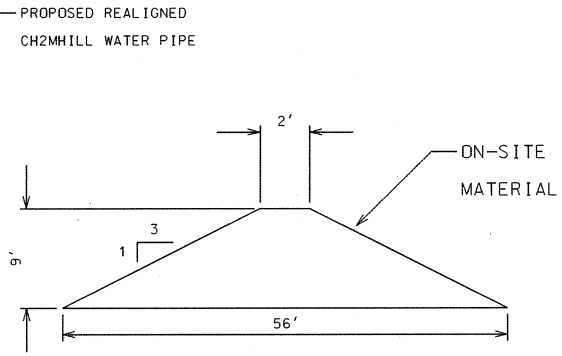

BERM SECTION(TYP)

N.T.S.

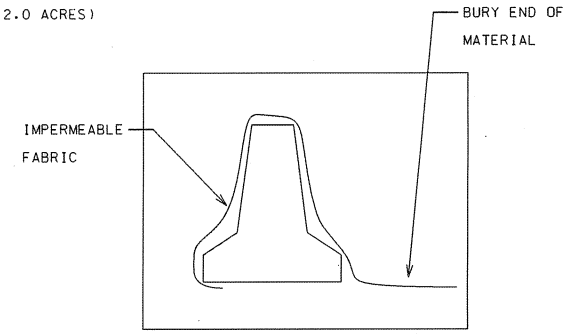

JERSEY BARRIER SECTION

N.T.S.

0 100' 200'

SCALE:1"=100'

NOTES:

1. INTERIOR OF BERMS CONTAINS TOTAL VOLUME OF 108,750 CY. CURRENT ESTIMATED DREDGED SEDIMENT IS 100,000 CY.
2. MINIMAL GRADING WILL BE PERFOMED ON SITE TO LEVEL IT, WITH AN AVERAGE DEPTH OF 1 FOOT. THIS WILL YIELD 21,000 CY MATERIAL, WHICH WILL BE USED FOR THE EXTERIOR BERMS.
3. SILT FENCE AND CHAIN LINK FENCE WILL BE PLACED ALONG THE PERIMETER TOE OF THE BERM.
4. LINED JERSERY BARRIERS WILL BE PLACED ALONG THE WEST EDGE OF THE SITE, ALONG THE EDGE OF THE INNER HARBOR.
5. ALL EXISTING MONITORING WELLS SHALL BE PROTECTED DURING WORK. OFFSET A MINIMUM 20' FROM WORK, AND REMAIN IN USE.
6. CH2MHILL WATER PIPE IS ASSUMED TO BE MOVED TO THE WEST EDGE OF THE SITE AND WILL BE PROETECTED DURING WORK.

US Army Corps of Engineers®

MARK	DESCRIPTION	TRACKING NO.	ACTION	DATE
1	DELETED SECTION F	M002	PM	NOV 15
2	REVISED SECTIONS A, C, AND E	M001	P3001	NOV 15

DESIGNED BY: MARK VANDEN BERG
DRAWN BY: LCV
CKED BY: CHK
QUANTITIES BY: JOHN GRONDELSKI, P.E.
PLOT SCALE: 1"=100'
PLOT DATE: 6/9/2015
FILE NAME: W:\MKE\DWG\PIPE_C-002.DGN
DATE:
SOLICITATION NO.: NA
CONTRACT NO.: NA
FILE NUMBER: XXXX

U.S. ARMY CORPS OF ENGINEERS
CHICAGO DISTRICT
CHICAGO, IL

WAUKEGAN OUTER HARBOR
INTERIM DREDGED MATERIAL MANAGEMENT PLAN
WAUKEGAN, IL

SEDIMENT DISPOSAL SITE LAYOUT

SHEET IDENTIFICATION
C-003
SHEET 5 OF 5