Illinois Department of
Natural Resources
Office of Water Resources

Project:
Job No.:
Sheet: Of
Computed by: Date:
Checked by: Date:

Stratton Lock and Dam Life Extension Study

April 16, 2012 Public Presentation

Illinois Department of
Natural Resources
Office of Water Resources

Project: _____
Job No.: _____
Sheet: _____ Of _____
Computed by: _____ Date: _____
Checked by: _____ Date: _____

Goals and Objectives

- Provide new gate structure that has the same hydraulic capacity as existing structure but with improved winter operation characteristics
- Reduce waiting time for boats wanting to move through the locks

Illinois Department of
Natural Resources
Office of Water Resources

Project:
Job No.:
Sheet: Of
Computed by: Date:
Checked by: Date:

This Project Will Not:

- Eliminate need for winter drawdown
- Eliminate flooding in the Chain of lakes
- Eliminate flooding downstream of dam
- Eliminate waiting time for all boats going through lock

Illinois Department of
Natural Resources
Office of Water Resources

Project:
Job No.:
Sheet: Of
Computed by: Date:
Checked by: Date:

Gate Concerns

- Gates constructed in 1939 and have reached end of serviceable life
- The gate section of this structure has significant concrete deterioration.

Illinois Department of
Natural Resources
Office of Water Resources

Project:
Job No.:
Sheet: Of
Computed by: Date:
Checked by: Date:

Gate Concerns

- The tops of the walls along the access steps on both the east and west sides have heavy spalling and loss of concrete.
- The upper walkway surface repair topping is heavily cracked and spalled.

Illinois Department of
Natural Resources
Office of Water Resources

Project:
Job No.:
Sheet: Of
Computed by: Date:
Checked by: Date:

Gate Concerns

- The steel gates are heavily corroded with visible steel delamination on the downstream side of the gates.
- The upstream sides of the exposed gates are heavily corroded in certain areas.

Illinois Department of
Natural Resources
Office of Water Resources

Project:
Job No.:
Sheet: Of
Computed by: Date:
Checked by: Date:

Gate Concerns

Gates are difficult/hazardous to operate in winter

Illinois Department of
Natural Resources
Office of Water Resources

Project: _____
Job No.: _____
Sheet: _____ Of _____
Computed by: _____ Date: _____
Checked by: _____ Date: _____

Pictures of Lock

Lock Concerns

The lock was opened for public use on June 1, 1960.

The lock is heavily used during its operation period, which can result in significant wait times during peak periods. These wait times have been known to be as high as four hours.

Illinois Department of
Natural Resources
Office of Water Resources

Project:
Job No.:
Sheet: Of
Computed by: Date:
Checked by: Date:

Lock Capacity

Stratton Lock Boat Passage Distribution
May 2000 through May 2010

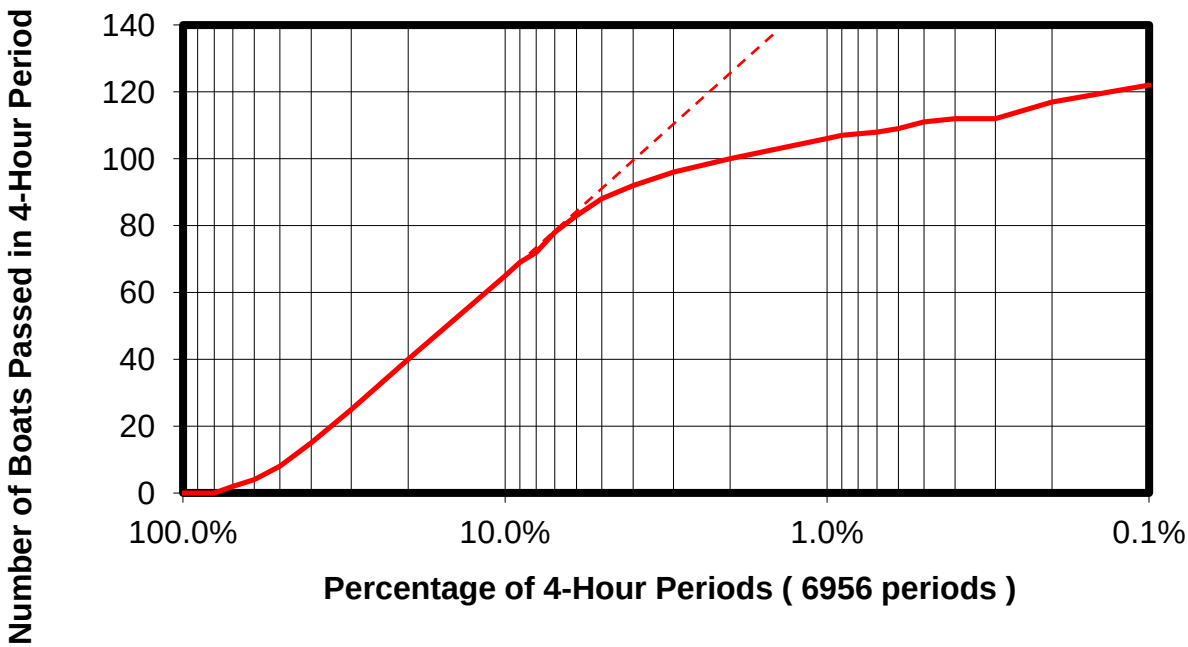

- **10 boats/lock** 1967 Report on Traffic Projection and Lock Sizing
- **6 boats/lock** 2005 Anecdotal Lock Tender Report
- **4 boats/lock** 2010 Anecdotal Lock Tender Report

Illinois Department of
Natural Resources
Office of Water Resources

Project:
Job No.:
Sheet: Of
Computed by: Date:
Checked by: Date:

HNTB Report and Results

Stratton Lock and Dam Life Extension Reconnaissance Study

Summary Report, Prepared for the Illinois Department of Natural Resources, Office of Water Resources - June 2005

Prepared by HNTB Corporation
111 North Canal Street
Chicago, Illinois 60606

HNTB

- Recommended Lock Extension
- Recommended Over/Under Taintor Gates

Design Team Members

- Hanson Professional Services
  Gates Alternatives,
  Geotechnical and Support facilities

- Bergmann Associates
  Lock Alternatives

- HDR
  Site Power, Equipment
  Operating Systems and Controls

- Office of Water Resources
  Site Surveying, Hydraulics and Permitting

Illinois Department of
Natural Resources
Office of Water Resources

Project:
Job No.:
Sheet: Of
Computed by: Date:
Checked by: Date:

Open House

December 14, 2011

- Presented preliminary Design concepts
- Solicited comments

IL DNR Newsbits for December

IDNR to Host Open House on Stratton Lock and Dam Lock Expansion and Sluice Gate Structure Replacement: The IDNR will host an open house on Wednesday, Dec. 14 to display alternatives for lock expansion and sluice gate structure replacement at William G. Stratton Lock and Dam on the Fox River in McHenry. The open house will be held on Dec. 14 from 4-7 p.m. at the William G. Stratton Lock and Dam, 2910 W. State Park Road in McHenry.

Decision Matrix Process

- Numerically Directed Weighting System (iterative process)
  - Design Criteria
  - Constructability Criteria
  - Performance Criteria
  - Costs

Illinois Department of
Natural Resources
Office of Water Resources

Project:
Job No.:
Sheet: Of
Computed by: Date:
Checked by: Date:

Gate Decision Criteria

- Construction Cost
- Fail Safe Capability
- Ability to be Remotely Controlled and Operated
- Ability to Operate the Gates in Manual Mode
- Routine Maintenance
- Hydraulic Efficiency
- Sediment/Debris Accumulation Constructability
- Reliability
- Public Safety
- Ice Considerations
- Bulkheads for Maintenance and Repair
- Permissibility
- Life Cycle Maintenance

Gate alternatives

- Rehabilitation of Existing gates
- Over/Under Taintor Gates
- Roller Gates
- Torque Tube Gates

Sample Gate Decision Matrix

		Alternative X	
		Generic Gate Alternative	
Decision Criteria	Weighting Factor	Score	Weighted
Construction Cost	5	3	15
Fail Safe Capability	5	3	15
Ability to be Remotely Controlled and Operated	2	5	10
Ability to Operate the gates in manual mode	5	2	10
Routine Maintenance	4	4	16
Hydraulic Efficiency	5	2	10
Sediment/Debris Accumulation	3	2	6
Constructability	3	4	12
Reliability	5	1	5
Public Safety	4	2	8
Ice Considerations	5	3	15
Bulkheads for Maintenance and Repair	5	4	20
Permitability	1	4	4
Life Cycle Maintenance	3	2	6
Total Score			152
Total Score without Construction Cost			137

Weighting Factor is relative to Criteria
Score is relative to Alternatives

Illinois Department of
Natural Resources
Office of Water Resources

Project:
Job No.:
Sheet: Of
Computed by: Date:
Checked by: Date:

Rehab of Existing Gates:

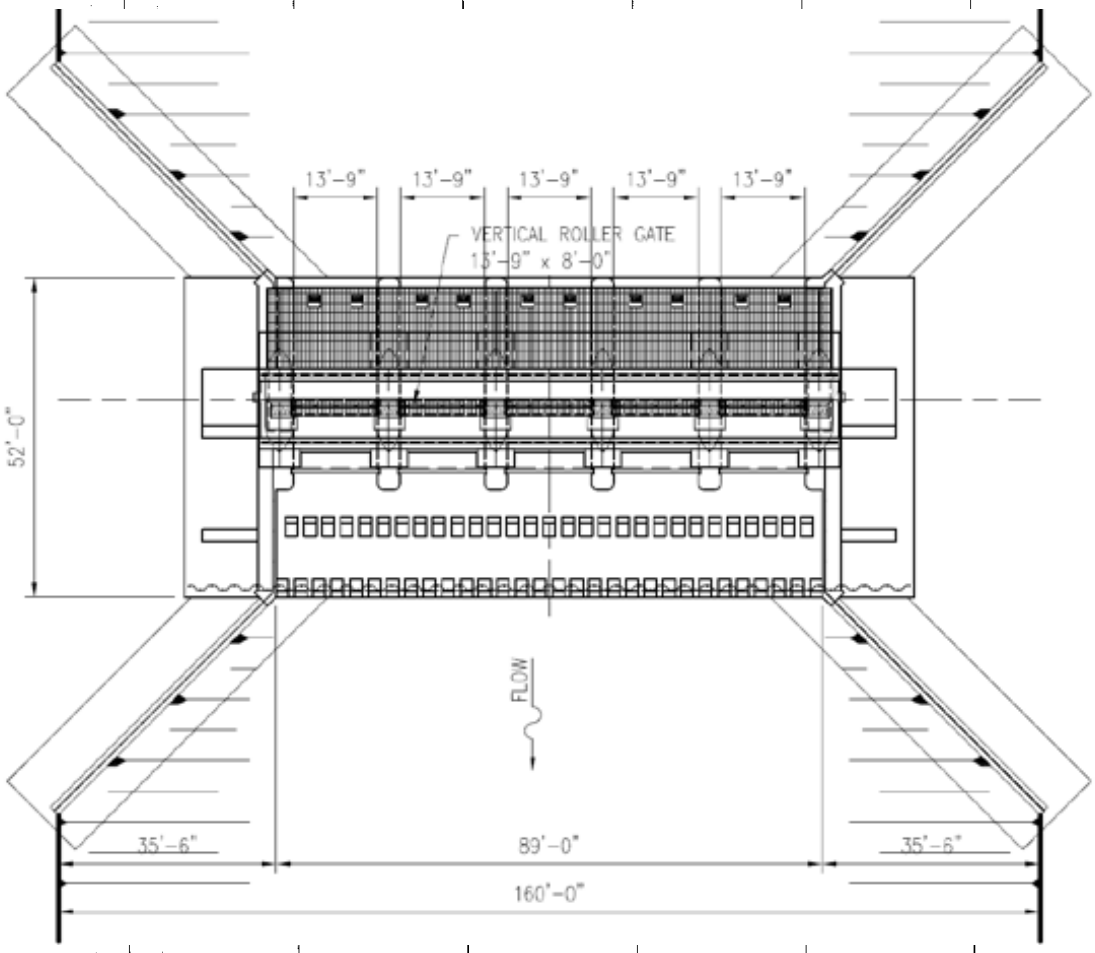

- Repair existing concrete substructure below elevation 740.00.
- Remove and replace concrete superstructure above elevation 740.00.
- Gate configuration: Five new 13 ft-9 in.- wide vertical roller type gates

Illinois Department of
Natural Resources
Office of Water Resources

Project:
Job No.:
Sheet: Of
Computed by: Date:
Checked by: Date:

Rehab of Existing Gates: Pros, Cons, Costs

- Hydraulic efficiency is identical (or nearly identical) to existing gates.
- Permitting is simplified

- Additional investigation of substructure components is required.
- Increased potential for construction phase change orders due to nature of repair work.
- No improvement to debris management difficulty.
- No improvement to ice management.
- Anticipate additional future maintenance as compared against other alternatives.

$6,640,000

Illinois Department of
Natural Resources
Office of Water Resources

Project:
Job No.:
Sheet: Of
Computed by: Date:
Checked by: Date:

Profile of Roller Gates Alternative

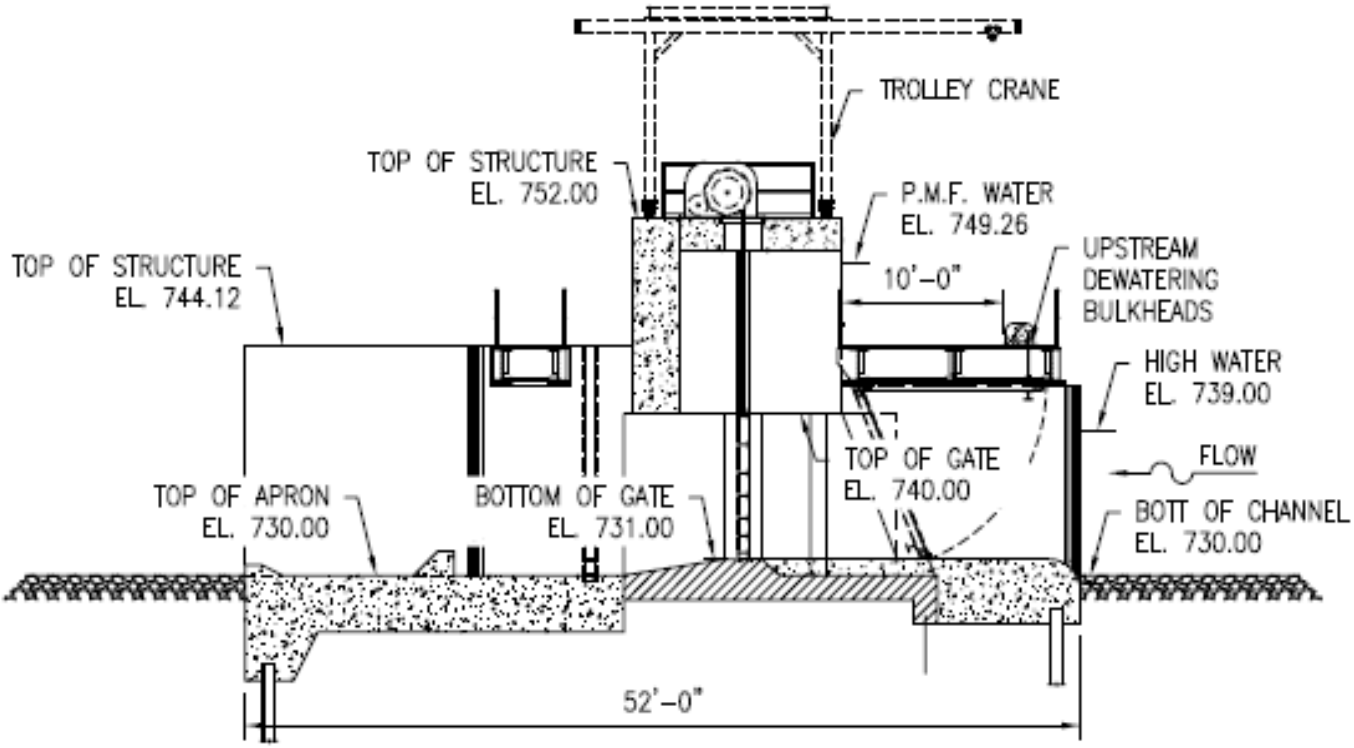

SECTION AT VERTICAL ROLLER GATE

Roller Gates: Pros, Cons, Costs

- Hydraulic efficiency is identical (or nearly identical) to existing gates.
- Common operating systems for gates simplifies inventory of spare parts.
- Improved gate sealing characteristics as compared with other alternatives.

- Gate operating machinery is exposed to the elements.
- No significant improvement in debris management opportunities.
- No improvement to ice management.

$7,240,000

Illinois Department of
Natural Resources
Office of Water Resources

Project:
Job No.:
Sheet: Of
Computed by: Date:
Checked by: Date:

Profile of Tainter Gates Alternative

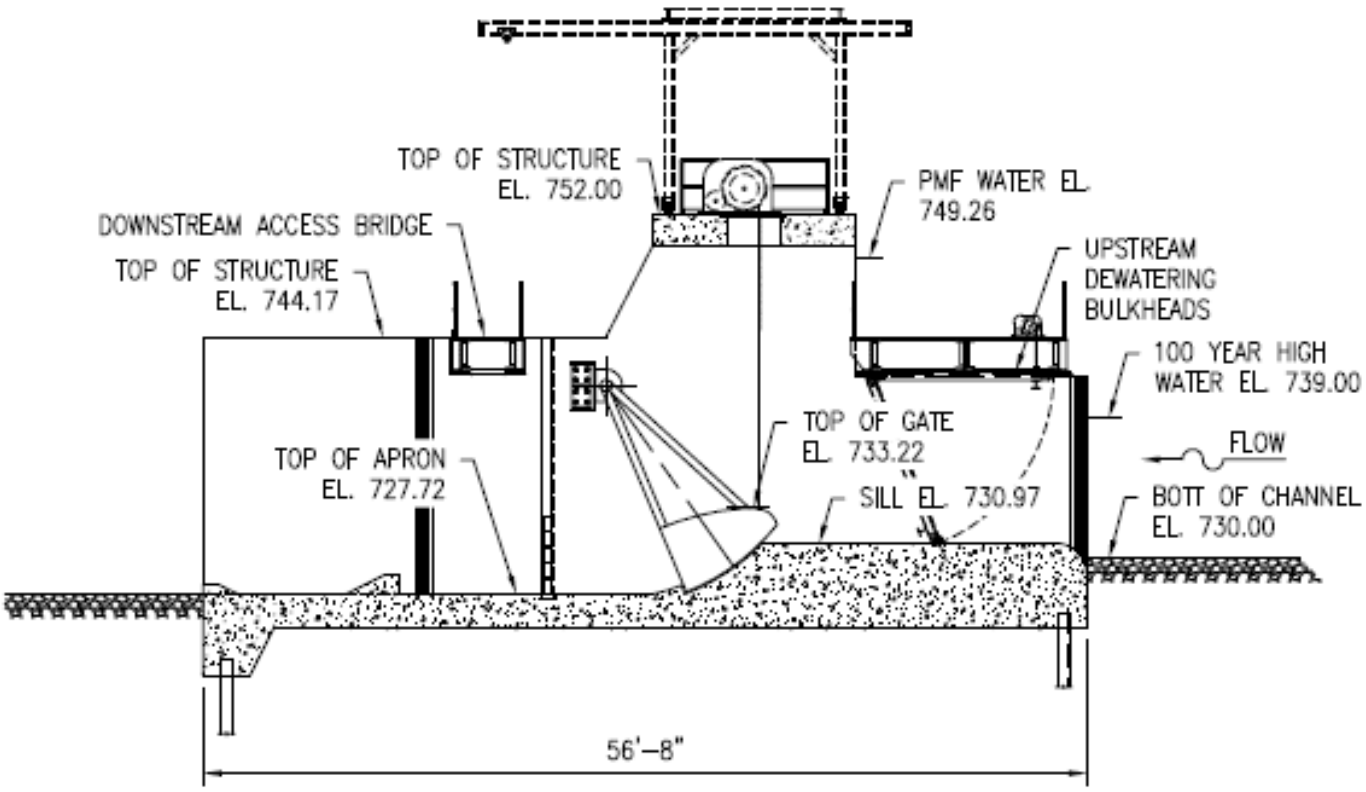

SECTION AT SUBMERSIBLE TAINTER GATE

Illinois Department of
Natural Resources
Office of Water Resources

Project: _____
Job No.: _____
Sheet: _____ Of _____
Computed by: _____ Date: _____
Checked by: _____ Date: _____

Marseilles Field Trip

Illinois Department of
Natural Resources
Office of Water Resources

Project:
Job No.:
Sheet: Of
Computed by: Date:
Checked by: Date:

Marseilles Field Trip

Tainter Gates: Pros,

- Common operating systems for gates simplifies inventory of spare parts.
- A submersible gate will pass more ice than a nonsubmersible gate, given the same hydraulic conditions.
- Many gate freeze up problems are eliminated because the gate is kept under water.
- Can be enclosed upstream, downstream and on the sides (like the gates at Marseilles) to reduce the potential for ice and debris build-up
- Does not require gate slots, which can become plugged with ice or debris and can cause cavitation.

Tainter Gates: Cons, Costs

- Difficulty of sealing at gate sill..
- Imprecise elevation control.
- In winter, freezing of this leakage of water inside the gate skin adds to the weight of the gate structure.
- The side and bottom seals of tainter spillway gates may leak, causing spray resulting in ice build-up on the pier walls or the gates themselves, causing operations problems.
- During severe cold, the gates must be moved frequently or they will freeze in place.
- The gates must supply sufficient current in the pool upstream to draw the ice to the gate

$6,600,000

Illinois Department of
Natural Resources
Office of Water Resources

Project:
Job No.:
Sheet: Of
Computed by: Date:
Checked by: Date:

Profile of Torque Tube Gates Alternative

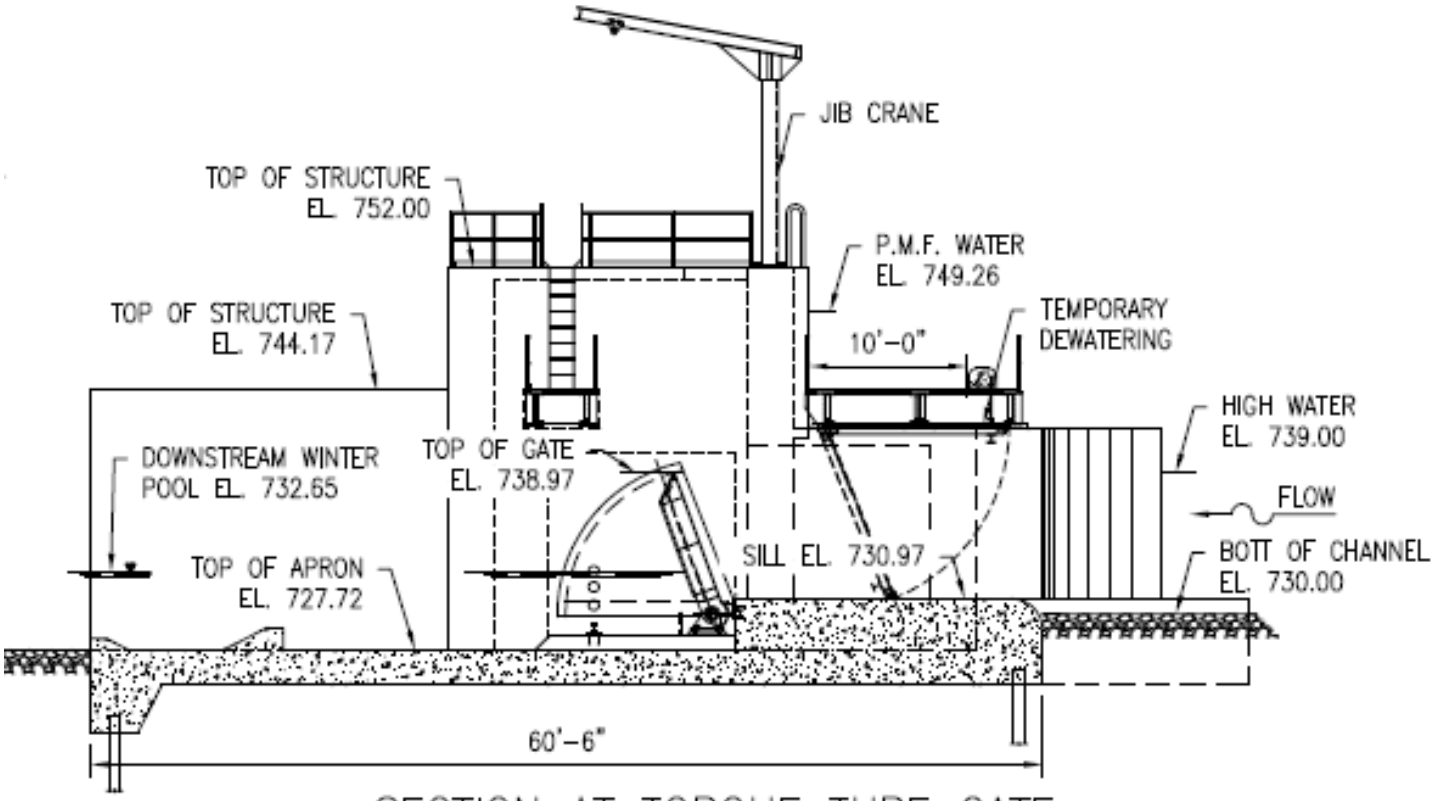

SECTION AT TORQUE TUBE GATE

Illinois Department of
Natural Resources
Office of Water Resources

Project:
Job No.:
Sheet: Of
Computed by: Date:
Checked by: Date:

Coffeen Field trip

Torque Tube Gates: Pros

- Minimizes extent of operating equipment exposed to the elements.
- Improved debris passage characteristics via torque tube gate sections.
- Preferred for accurate control of reservoir levels
- Preferred when floating debris and/or ice have to be skimmed.
- Redundancy of operating systems via two hydraulic power units and two actuators per gate section.
- Gate type has a positive performance history as reported by two gate vendors and an owner of a similar that has been in operation for over 50 years.

Torque Tube Gates: Cons, Costs

- Hydraulic power units and operating machinery requires construction of vaults which may necessitate channel bank modifications to achieve the required effective width for stream flow.
- Redundancy is reduced due to three (versus four or five, as compared with other alternatives) gate sections.
- Complexity of sealing torque tube at vault entry points.
- If hydraulic operators fail, by design, the gate will lower which would initiate loss of pool upstream of the gates until the drop leaf bulkheads are lowered.

$7,990,000

Illinois Department of
Natural Resources
Office of Water Resources

Project: _____
Job No.: _____
Sheet: _____ Of _____
Computed by: _____ Date: _____
Checked by: _____ Date: _____

Final Decision Matrix for Gates

			Alternative 1		Alternative 2		Alternative 3		Alternative 4	
			Reuse Existing Structure with New Vertical Roller Gates and Controls		New Sluice Gates		New Tainter Gates		New Hinged, Torque Tube Crest Gates	
Criteria		Weight	Score	Weighted	Score	Weighted	Score	Weighted	Score	Weighted
1	Construction Cost	5	5	15	5	25	5	25	4	20
2	Fail Safe Capability	5	5	25	4	20	4	20	4	20
3	Ability to be Remotely Controlled and Operated	2	5	10	5	10	5	10	5	10
4	Ability to Operate Gates in Manual Mode	5	5	25	5	25	3	15	5	25
5	Routine Maintenance	4	3	12	5	20	4	16	5	20
6	Hydraulic Efficiency	5	5	25	5	25	5	25	5	25
7	Sediment /debris accumulation	3	4	12	4	12	5	15	4	12
8	Constructability	3	2	6	5	15	5	15	5	15
9	Reliability	5	4	20	5	25	4	20	5	25
10	Public Safety	4	3	12	3	12	4	16	5	20
11	Ice Considerations	5	3	15	3	15	4	20	5	25
12	Bulkheads for Maintenance	5	5	25	5	25	5	25	5	25
13	Permitability	1	5	5	4	4	4	4	4	4
14	Life Cycle Maintenance	3	4	12	5	15	4	12	4	12

Illinois Department of
Natural Resources
Office of Water Resources

Project:
Job No.:
Sheet: Of
Computed by: Date:
Checked by: Date:

Lock Decision Criteria

- Construction Cost
- Navigation During Construction
- Navigation in Final Condition
- Future Maintenance
- Operations During Construction
- Operations in Final Condition (labor required)
- Peak Usage Performance
- Off-Peak Performance
- System Redundancy
- Impacts on Other Users
- Operational Training

Lock alternatives

- Extension of Existing Lock
- New Lock on riverside of Existing Lock
- New Lock on land side of Existing Lock

Illinois Department of
Natural Resources
Office of Water Resources

Project: _____
Job No.: _____
Sheet: _____ Of _____
Computed by: _____ Date: _____
Checked by: _____ Date: _____

Sample Lock Decision Matrix

		Alternative X	
		Generic Lock	
Decision Criteria	Weighting Factor	Score	Weighted
Construction Cost	5	5	25
Navigation During Construction	4	1	4
Navigation in Final Condition	4	5	20
Future Maintenance	3	4	12
Operations During Construction	2	4	8
Operations in Final Condition (labor required)	4	5	20
Peak Usage Performance	5	4	20
Off-Peak Performance	2	4	8
System Redundancy	4	3	12
Impacts on Other Users	1	5	5
Operational Training	2	5	10
Total Score			144
Total Score without Construction Cost			119

Illinois Department of
Natural Resources
Office of Water Resources

Project:
Job No.:
Sheet: Of
Computed by: Date:
Checked by: Date:

Plan View of Lock Extension

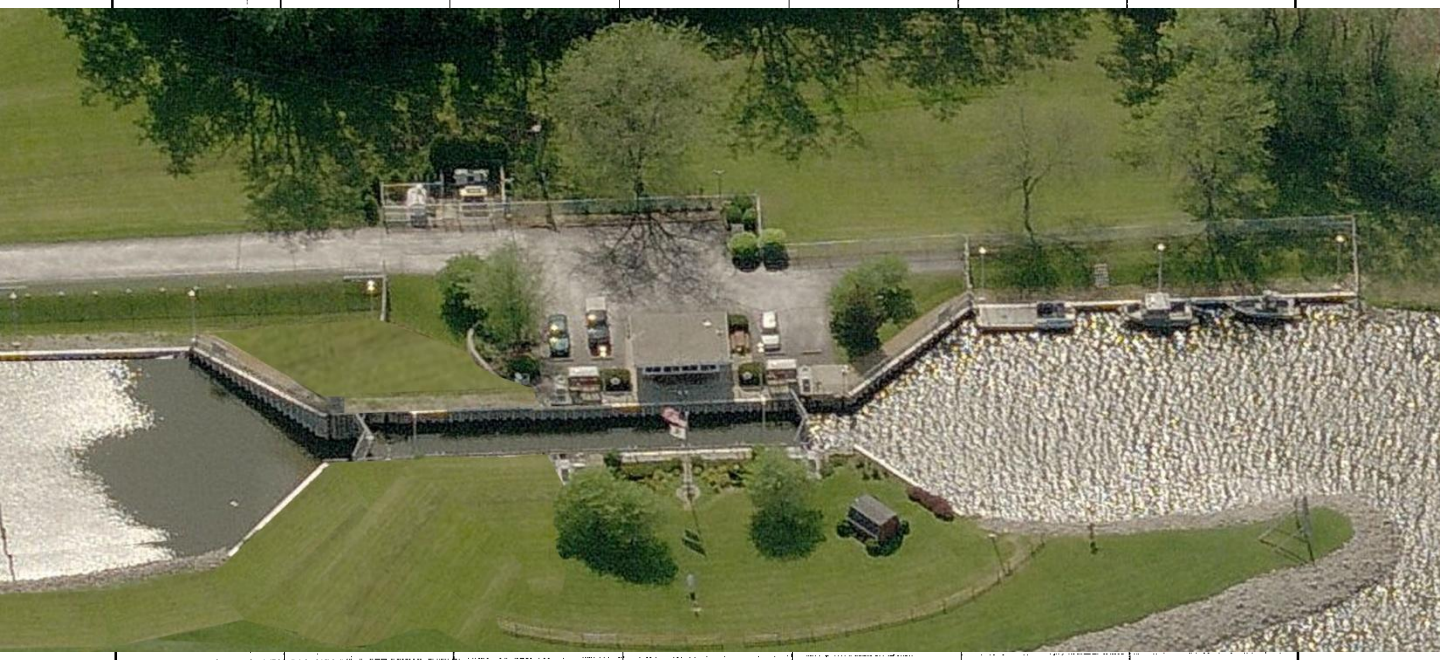

Illinois Department of
Natural Resources
Office of Water Resources

Project: _____
Job No.: _____
Sheet: _____ Of _____
Computed by: _____ Date: _____
Checked by: _____ Date: _____

Plan View of Lock Extension

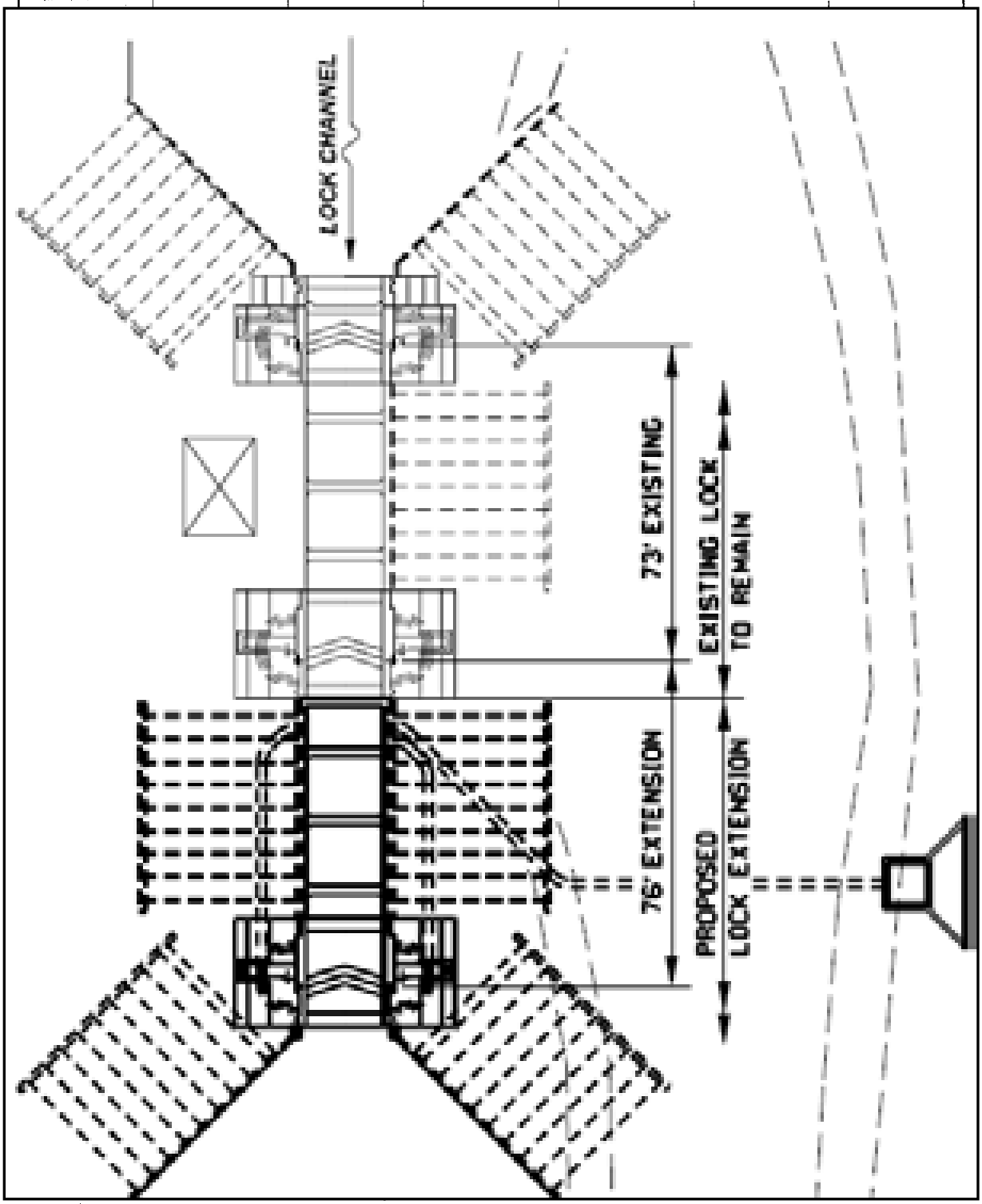

Illinois Department of
Natural Resources
Office of Water Resources

Project:
Job No.:
Sheet: Of
Computed by: Date:
Checked by: Date:

Lock Extension: Pros

- Access to opposite (east) wall not required for operation of expanded facility.
- Boaters are accustomed to operational procedures for single lock (lower user learning curve).
- Maintains existing gate control house.
- Pilot house structure not required.
- Lower operational and maintenance costs.
- Least amount of approach channel improvements required to facilitate alternative

Illinois Department of
Natural Resources
Office of Water Resources

Project:
Job No.:
Sheet: Of
Computed by: Date:
Checked by: Date:

Lock Extension: Cons, Costs

- Highest risk of construction activity impeding or congesting traffic during boating season.
- Lowest increase in boater lockage capacity (225% increase for this alternative compared to 246% increase for other alternatives)
- Reduced facility redundancy. There would be no opportunity to continue lockages if the lock needed to be shut down for maintenance.

$4,300,000

Illinois Department of
Natural Resources
Office of Water Resources

Project:
Job No.:
Sheet: Of
Computed by: Date:
Checked by: Date:

Plan View of Riverside Lock

Illinois Department of
Natural Resources
Office of Water Resources

Project: _____
Job No.: _____
Sheet: _____ Of _____
Computed by: _____ Date: _____
Checked by: _____ Date: _____

Plan View of Riverside Lock

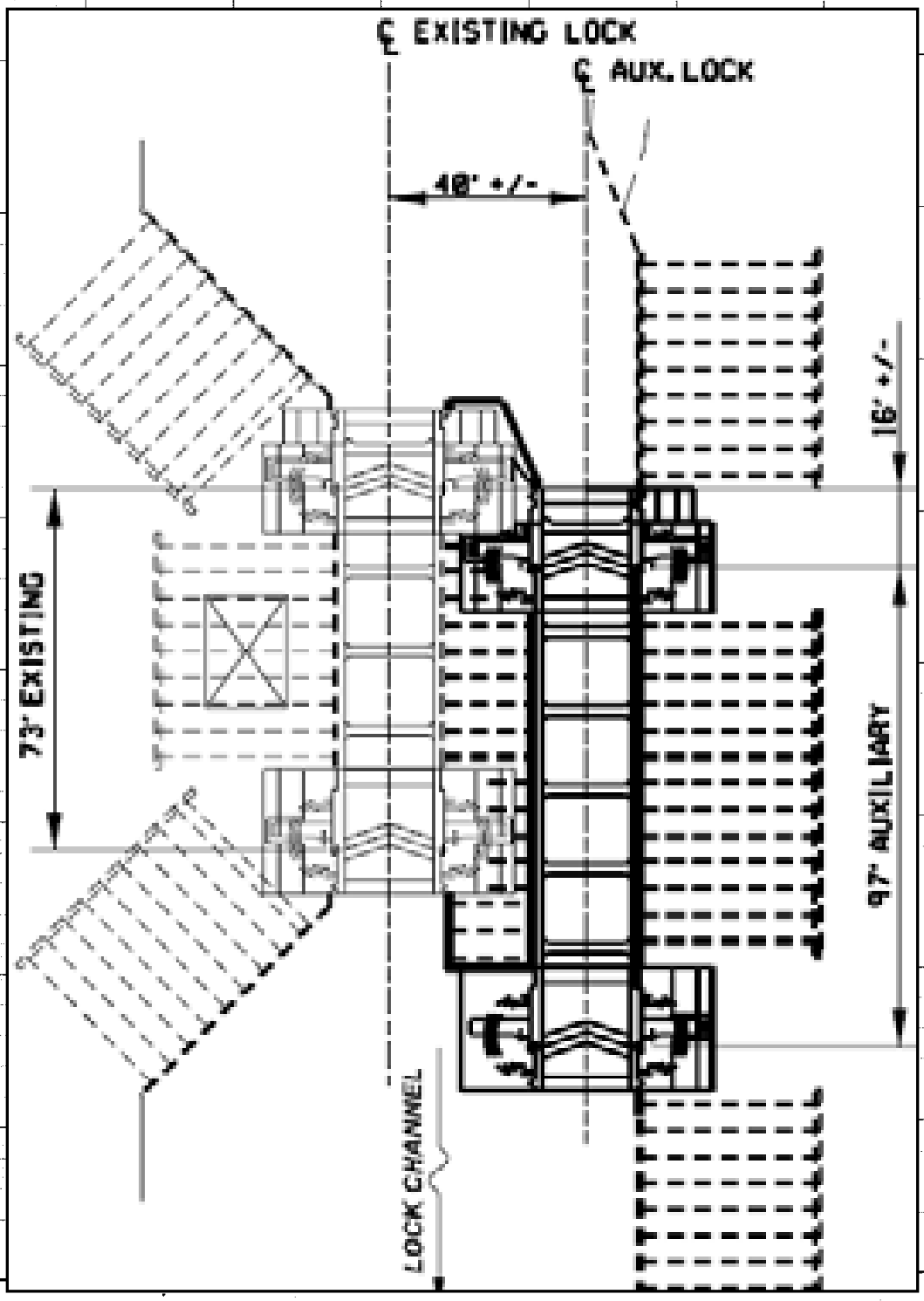

Illinois Department of
Natural Resources
Office of Water Resources

Project:
Job No.:
Sheet: Of
Computed by: Date:
Checked by: Date:

Riverside Lock: Pros

- Highest increase in boater lockage capacity. (246% increase compared to 225% increase for lock extension)
- Lowest risk of construction activity impeding or congesting traffic during boating season.
- Best facility redundancy. One lock can remain operational if second lock requires maintenance.
- Maintains existing gate control house.

Illinois Department of
Natural Resources
Office of Water Resources

Project:
Job No.:
Sheet: Of
Computed by: Date:
Checked by: Date:

Riverside Lock: Cons, Cost

- Pilot house structure is required.
- Higher operational and maintenance costs, although operations can be reduced to only one lock during non-peak periods to reduce such expenses.
- Requires more approach excavations and more complex guidewall improvements for widened access channel.
- Requires more approach channel maintenance dredging.
- Construction access more difficult to and from island (river) side.
- More complex vessel traffic patterns for lockmaster to regulate

$6,140,000

Illinois Department of
Natural Resources
Office of Water Resources

Project:
Job No.:
Sheet: Of
Computed by: Date:
Checked by: Date:

Plan View of Landside Lock

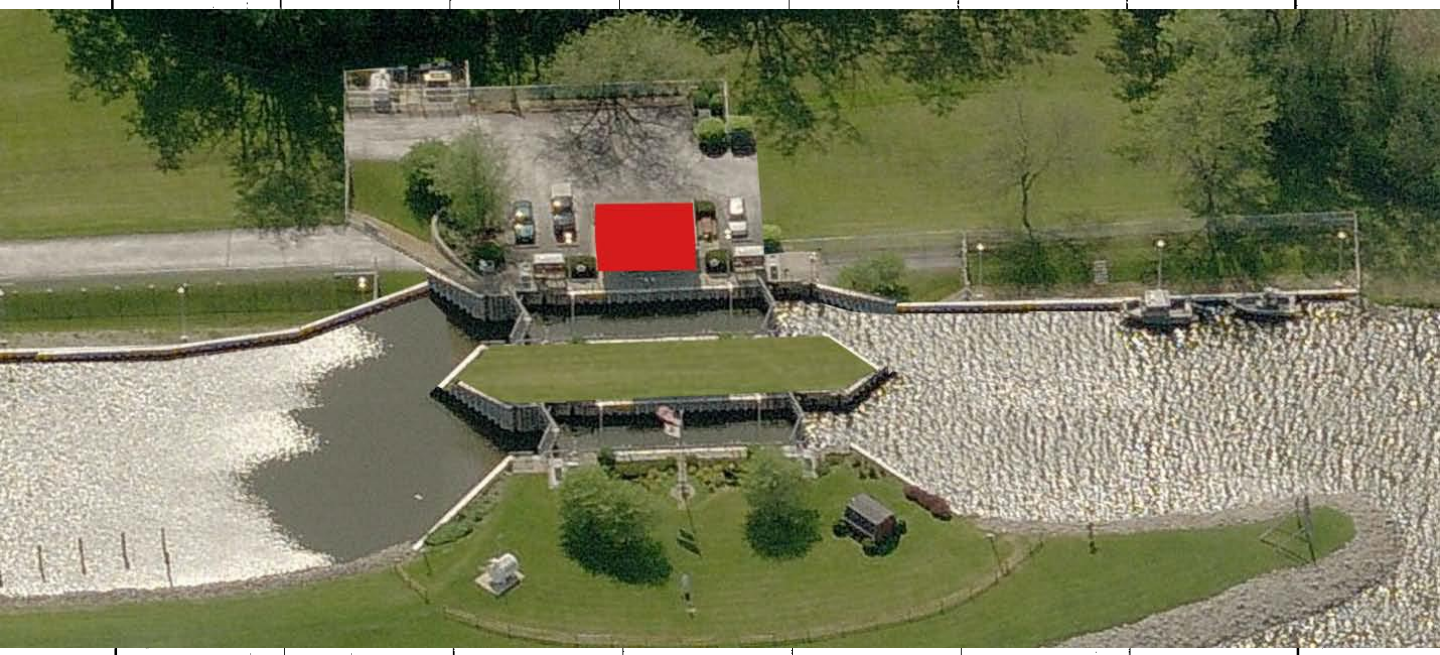

Illinois Department of
Natural Resources
Office of Water Resources

Project:
Job No.:
Sheet: Of
Computed by: Date:
Checked by: Date:

Plan View of Landside Lock

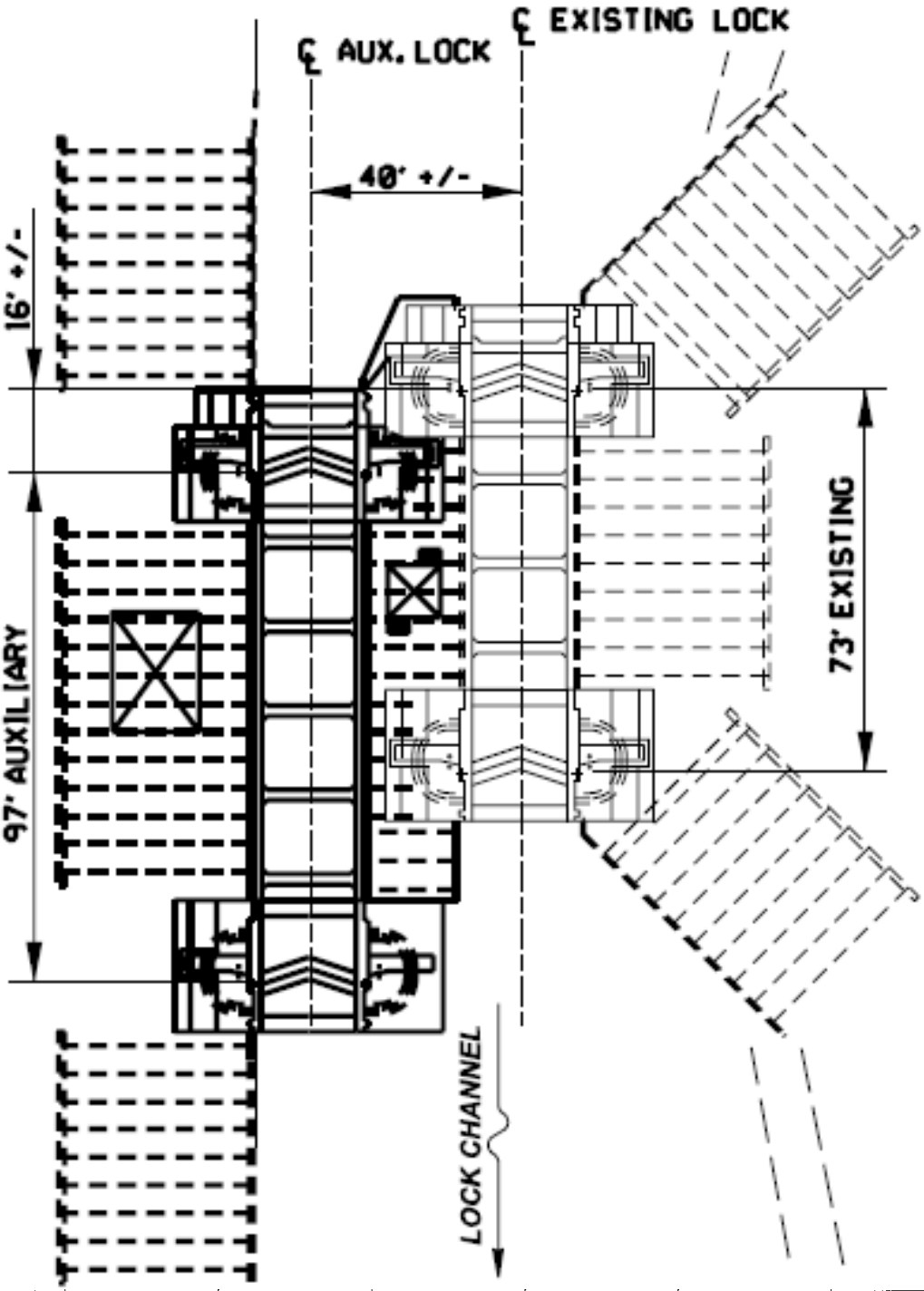

Illinois Department of
Natural Resources
Office of Water Resources

Project:
Job No.:
Sheet: Of
Computed by: Date:
Checked by: Date:

Land Side Lock: Pros

- Highest increase in boater lockage capacity. (246% increase compared to 225% increase for lock extension)
- Lower risk of construction activity impeding or congesting traffic during boating season.
- Best facility redundancy. One lock can remain operational if second lock requires maintenance.
- Alignment able to connect with existing approach wall, which can remain undisturbed.
- Construction access easier from land side, not requiring much work across channel.

Land Side Lock: Cons, Costs

- Highest disturbance to existing landside site features and utilities, such as parking area, lock house, septic, and water. There is also potential for impacts wetland areas and the existing levee system. Land acquisition may also be required.
- Pilot house structure is required.
- Higher operational and maintenance costs, although operations can be reduced to only one lock during non-peak periods to reduce such expenses.
- Possible boat traffic interferences with sheriff's mooring area immediately upstream of lock.
- More complex vessel traffic patterns for lockmaster to regulate.

$6,190,000

Illinois Department of
Natural Resources
Office of Water Resources

Project: _____
Job No.: _____
Sheet: _____ Of _____
Computed by: _____ Date: _____
Checked by: _____ Date: _____

Final Lock Decision Matrix

			Alternative 1 Lock Extension		Alternative 2A New Riverside Lock		Alternative 2B New Landside Lock	
Criteria		Weight	Score	Weighted	Score	Weighted	Score	Weighted
1	Construction Cost	5	5	25	3	15	3	15
2	Navigation During Construction	4	1	4	4	16	5	20
3	Navigation in Final Condition	4	5	20	3	12	3	12
4	Life Cycle & Future Maintenance	3	4	12	2	6	2	6
5	Operations During Construction	2	3	6	5	10	3	6
6	Operations in Final Condition	4	5	20	4	16	4	16
7	Peak Usage Performance	5	3	15	5	25	5	25
8	Off-Peak Performance	2	4	8	5	10	5	10
9	System Redundancy	4	3	12	5	20	5	20
10	Impact on Other Users	1	5	5	5	5	5	5
11	Operational Training	2	5	10	4	8	4	8
Total Score			137		143		143	
Total Score without Construction Cost (1) & Life Cycle Costs (4)			100		122		122	

Alt 2A / Alt 1 Ratio =	1.04	Based on Total Score
Alt 2A / Alt 1 Ratio =	1.14	Based on Total Score without Construction Cost (1)
Alt 2A / Alt 1 Ratio =	1.22	Based on Total Score without Construction Cost (1) & Life Cycle Costs (4)

Illinois Department of
Natural Resources
Office of Water Resources

Project:
Job No.:
Sheet: Of
Computed by: Date:
Checked by: Date:

Review of Lock Capacities and Costs

	Existing Lock	Extended Lock	Dual Lock
No. of Boats /Lockage	4	10	10
Boats Passed/Hour Two Direction Traffic	24	49.4	58.3
Boats Passed/Hour One Direction Traffic	12.6	28.4	31.1
Cost	$0	$4,300,000	$6,200,000

Illinois Department of
Natural Resources
Office of Water Resources

Project: _____
Job No.: _____
Sheet: _____ Of _____
Computed by: _____ Date: _____
Checked by: _____ Date: _____

Implementation Schedule

STRATTON LOCK & DAM IMPROVEMENTS - TIMELINE

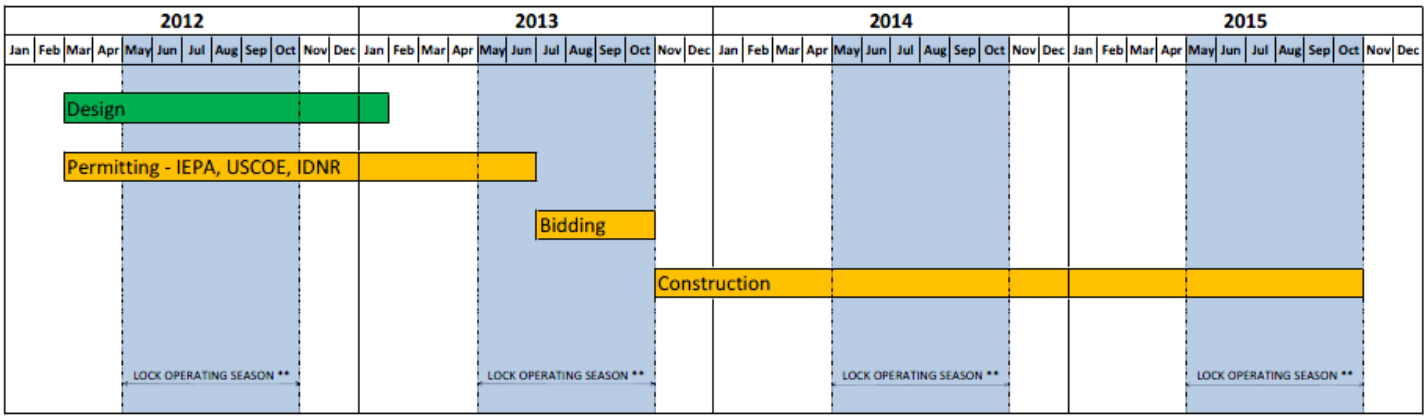

** EXISTING LOCK TO REMAIN FULLY OPERTIONAL DURING CONSTRUCTION

Illinois Department of
Natural Resources
Office of Water Resources

Project:
Job No.:
Sheet: Of
Computed by: Date:
Checked by: Date:

Gate Construction Sequence

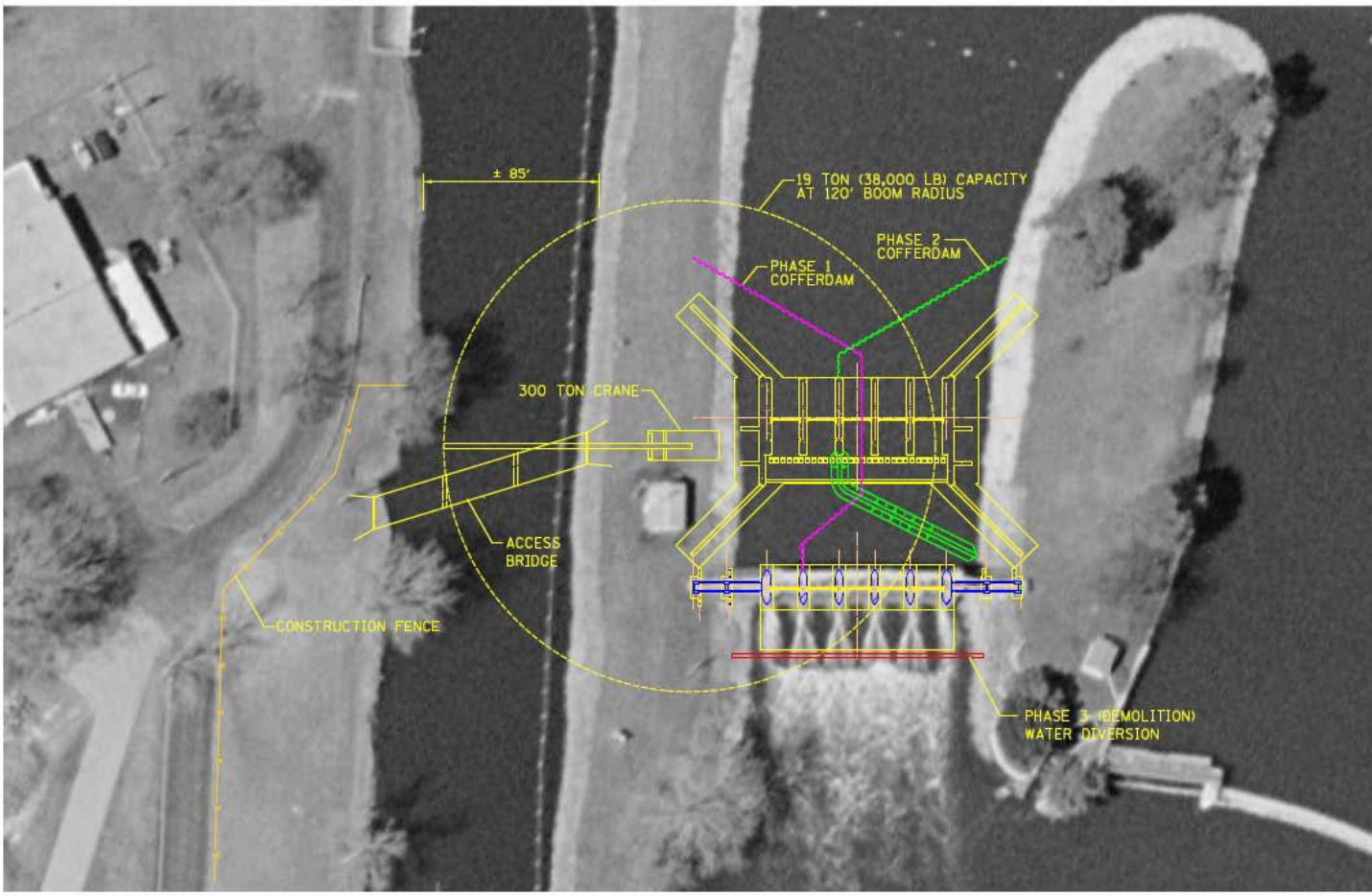

Phase 1 is in magenta

Phase 2 is in green

Illinois Department of
Natural Resources
Office of Water Resources

Project:
Job No.:
Sheet: Of
Computed by: Date:
Checked by: Date:

Lock Construction Sequence

Stages 1-3 during first non-boating season

Lock Construction Sequence

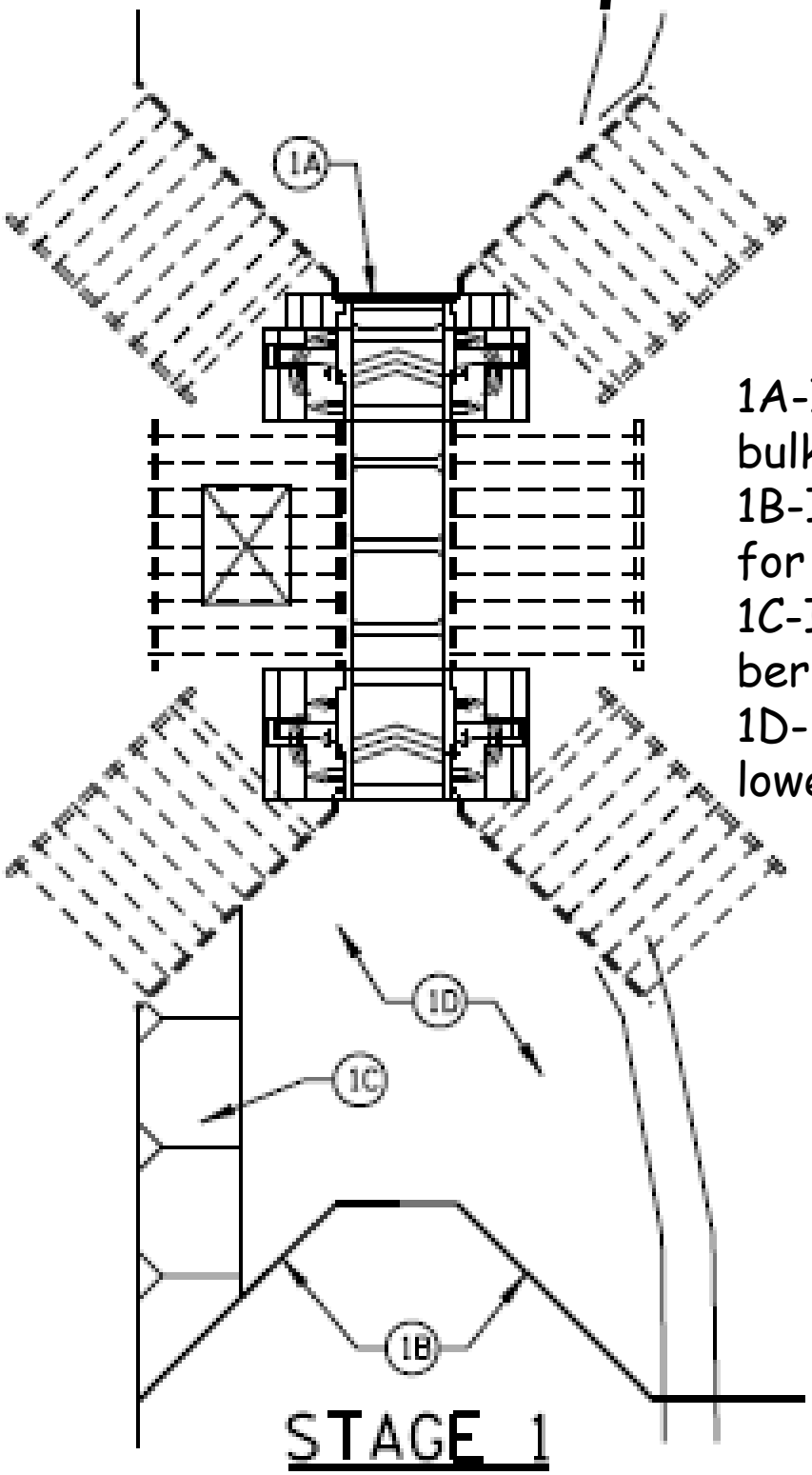

1A-Install upper dewatering bulkhead
1B-Install cofferdam wall for lower monolith
1C-Install earthern stability berm
1D-Dewater existing lock & lower forebay area

Lock Construction Sequence

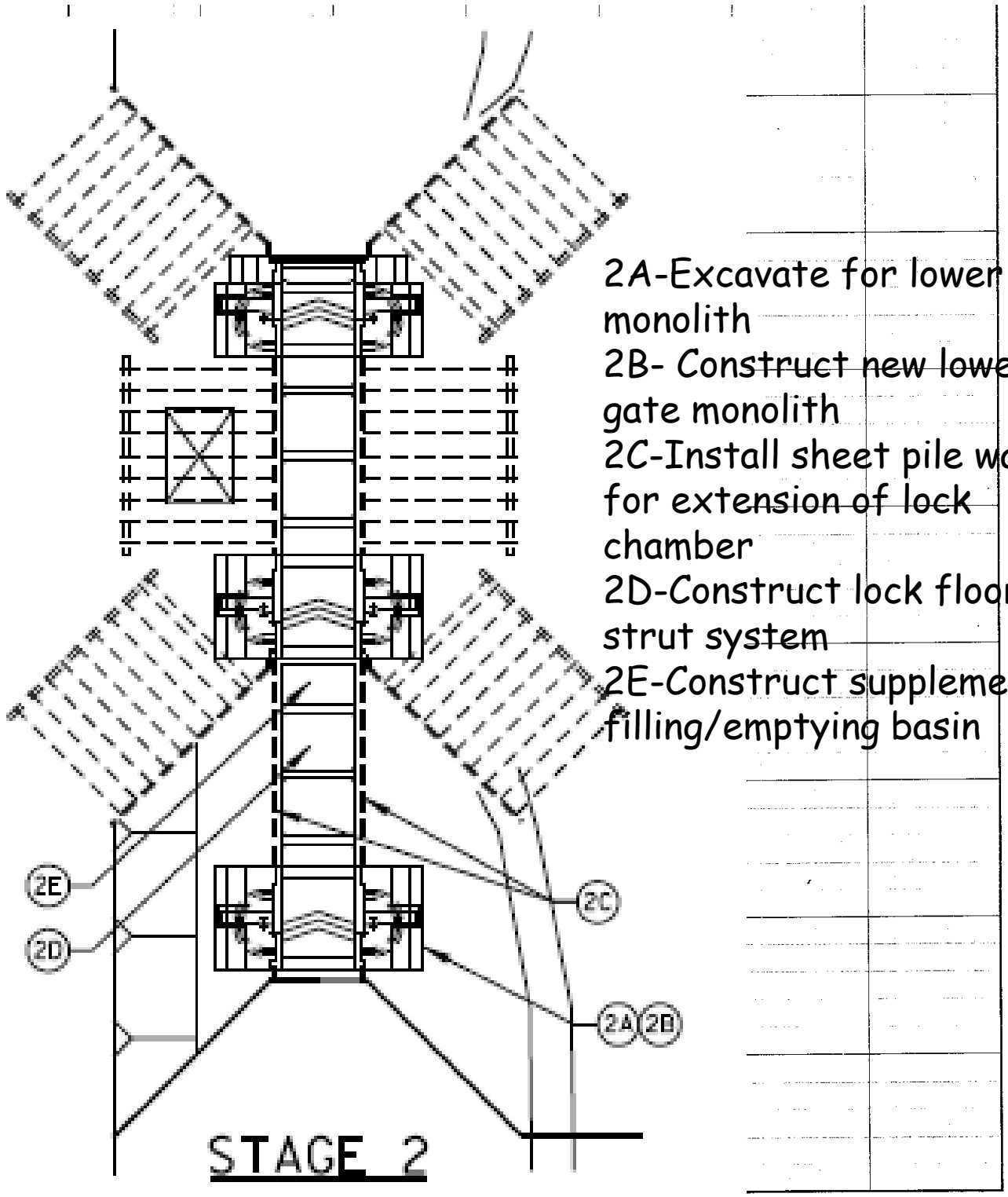

2A-Excavate for lower monolith
2B- Construct new lower gate monolith
2C-Install sheet pile walls for extension of lock chamber
2D-Construct lock floor and strut system
2E-Construct supplemental filling/emptying basin

Lock Construction Sequence

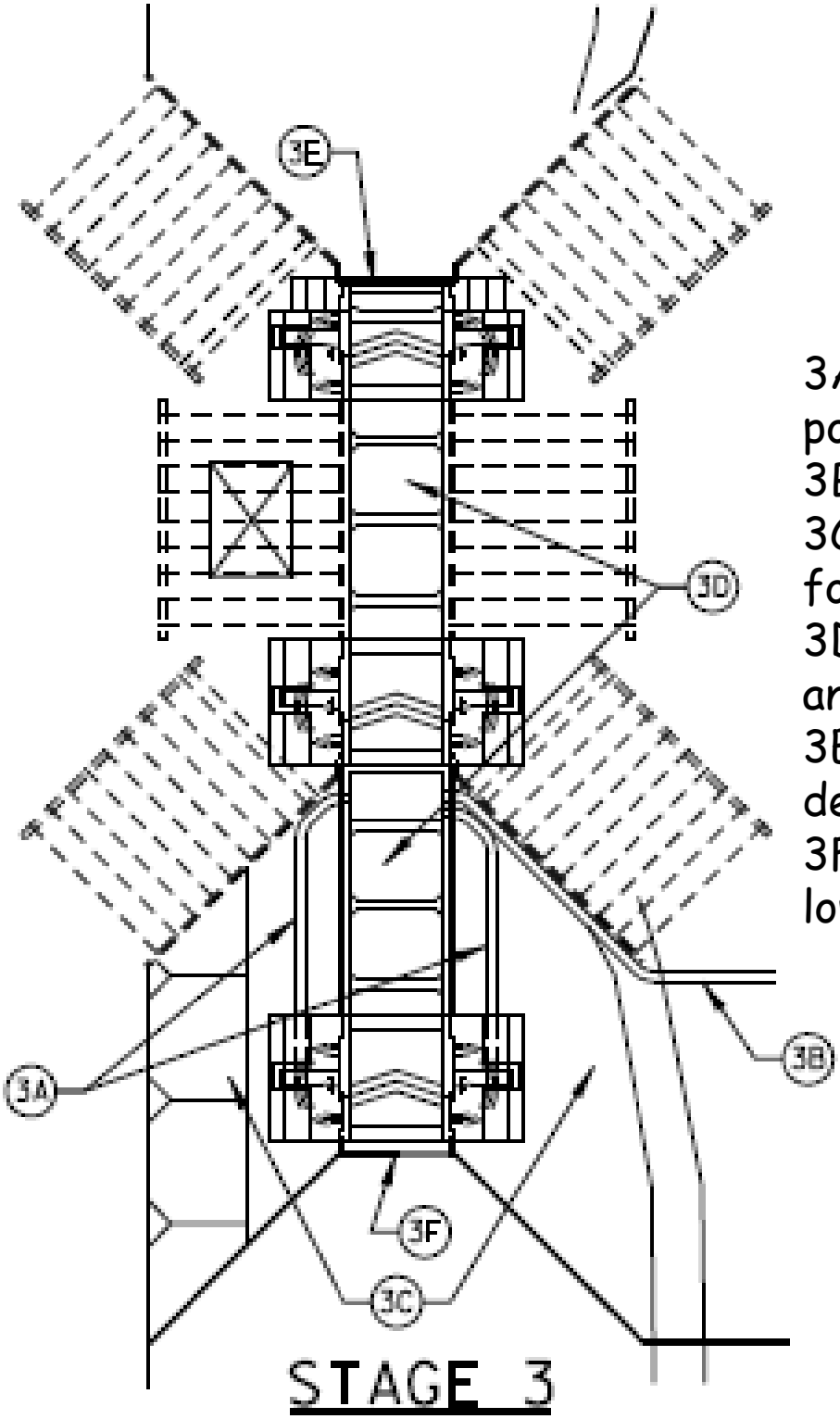

3A-Install emptying port
3B-Install filling port
3C-Backfill lower forebay area
3D-Rewater existing and extended lock area
3E-Remove upper dewatering bulkhead
3F-Remove portion of lower cofferdam

Illinois Department of
Natural Resources
Office of Water Resources

Project:
Job No.:
Sheet: Of
Computed by: Date:
Checked by: Date:

Lock Construction Sequence

Stages 4-5A during boating season

Lock Construction Sequence

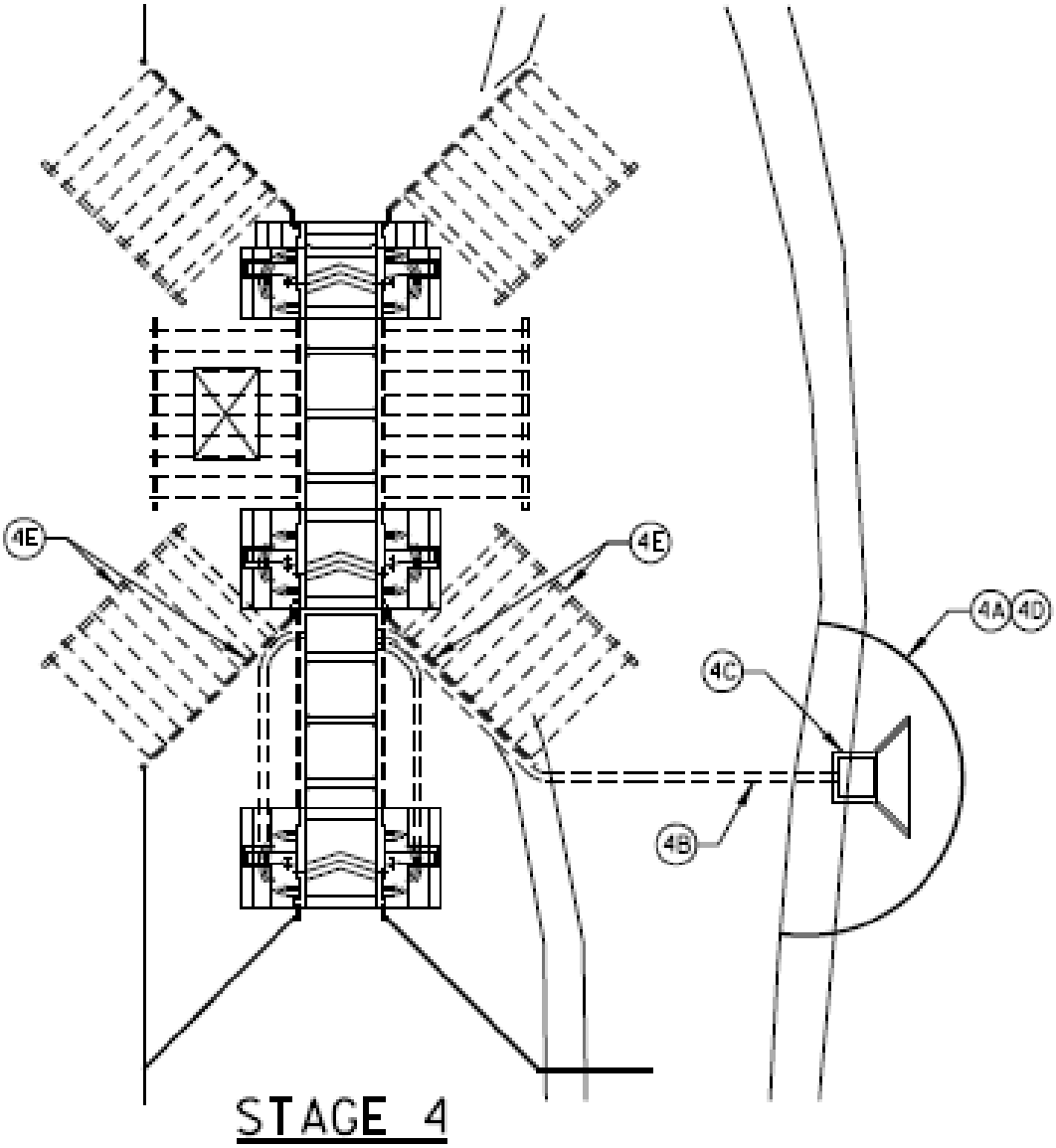

4A-Install intake gatewell cofferdam
4B-Install remainder of filling port
4C-Construct intake gatewell
4D-Remove intake gatewell cofferdam
4E-Remove existing lock wingwall tieback system
5A-Install extension wall tieback system

Illinois Department of
Natural Resources
Office of Water Resources

Project:
Job No.:
Sheet: Of
Computed by: Date:
Checked by: Date:

Lock Construction Sequence

Stages 5B-5F during second non-boating season

Lock Construction Sequence

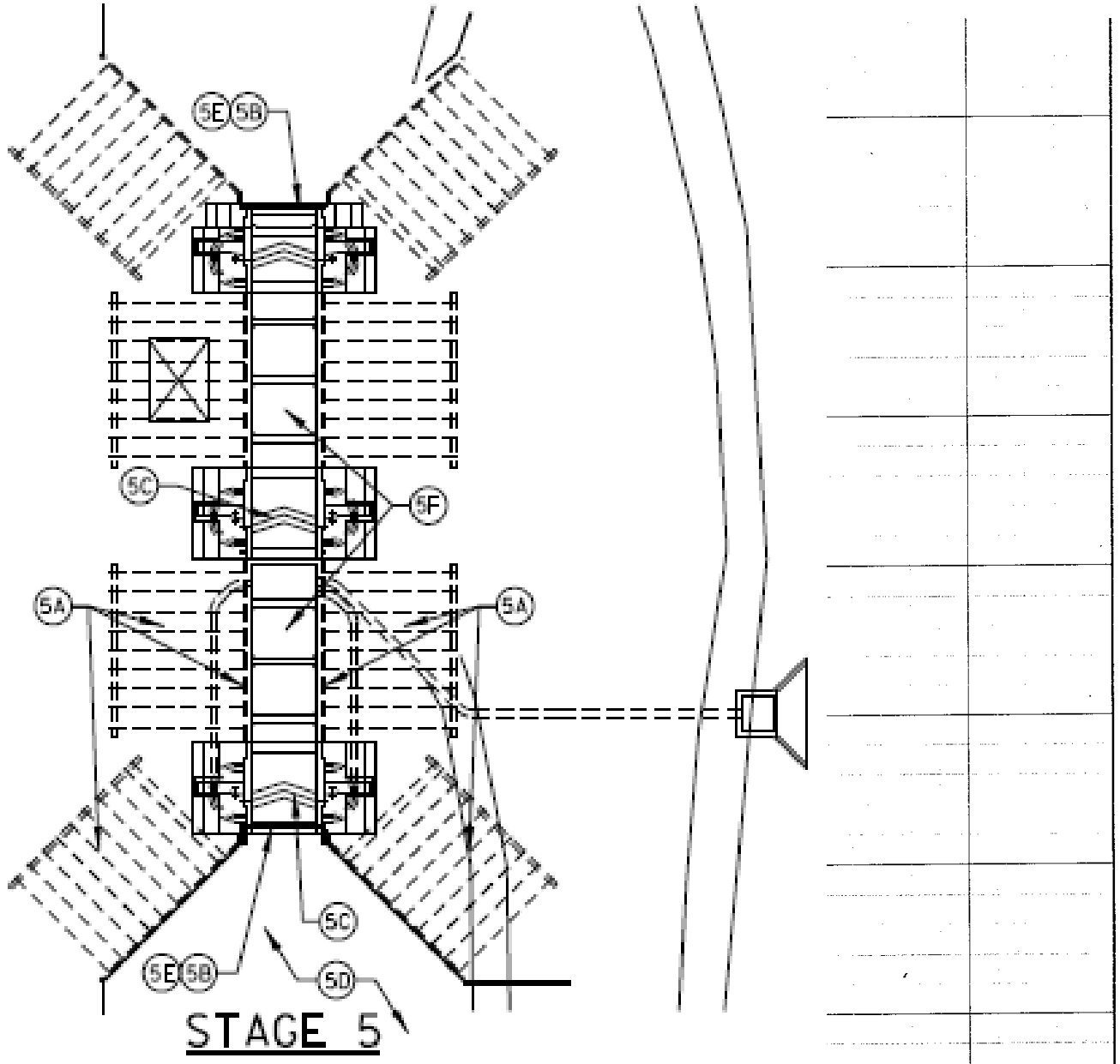

5B-Install dewatering bulkheads & dewater lock
5C-Relocate Lower miter gate to new monolith
5D-Complete approach dredging, stone protection and fender system
5E-Rewater locks and remove bulkheads
5F-Commission Extended lock

Illinois Department of
Natural Resources
Office of Water Resources

Project:
Job No.:
Sheet: Of
Computed by: Date:
Checked by: Date:

Next Steps

- Complete construction documents (plans and specifications) for gates and lock
- Submit permit applications to Corps, IEPA, OWR and others
- Advertize for bids using IDOT system
- Determine if funding is available to support both lock and gates construction
- Award contract(s)

Illinois Department of
Natural Resources
Office of Water Resources

Project:
Job No.:
Sheet: Of
Computed by: Date:
Checked by: Date:

Public Questions

Stratton Operations Web Site

http://dnr.state.il.us/owr/StrattonOperations.htm